Electrolux

electrolux.com/register

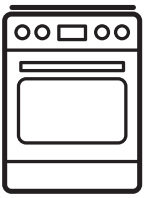

LKR66449NW

EN User Manual | **Cooker**

Welcome to Electrolux! Thank you for choosing our appliance.

Get usage advice, brochures, troubleshooting, service and repair information:
www.electrolux.com/support

Subject to change without notice.

CONTENTS

1. SAFETY INFORMATION..... 2
2. SAFETY INSTRUCTIONS..... 5
3. INSTALLATION.....7
4. PRODUCT DESCRIPTION.....9
5. BEFORE FIRST USE.....9
6. HOB - DAILY USE.....11
7. HOB - HINTS AND TIPS..... 11
8. HOB - CARE AND CLEANING..... 13
9. OVEN - DAILY USE 13
10. OVEN - CLOCK FUNCTIONS.....18
11. OVEN - HINTS AND TIPS.....19
12. OVEN - CARE AND CLEANING.....23
13. TROUBLESHOOTING..... 26
14. ENERGY EFFICIENCY.....27
15. ENVIRONMENTAL CONCERNS.....29

1. ⚠ SAFETY INFORMATION

Before the installation and use of the appliance, carefully read the supplied instructions. The manufacturer is not responsible for any injuries or damage that are the result of incorrect installation or usage. Always keep the instructions in a safe and accessible location for future reference.

1.1 Children and vulnerable people safety

- This appliance can be used by children aged from 8 years and above and persons with reduced physical, sensory or mental capabilities or lack of experience and knowledge if they have been given supervision or instruction concerning the use of the appliance in a safe way and understand the hazards involved. Children of less than 8 years of age and persons with very extensive and complex disabilities shall

be kept away from the appliance unless continuously supervised.
- Children should be supervised to ensure that they do not play with the appliance.
- Keep all packaging away from children and dispose of it appropriately.
- WARNING: The appliance and its accessible parts become hot during use. Keep children and pets away from the appliance when in use and when cooling down.
- Children shall not carry out cleaning and user maintenance of the appliance without supervision.

1.2 General Safety

- This appliance is for cooking purposes only.
- This appliance is designed for single household domestic use in an indoor environment.
- This appliance may be used in offices, hotel guest rooms, bed & breakfast guest rooms, farm guest houses and other similar accommodation where such use does not exceed (average) domestic usage levels.
- Only a qualified person must install this appliance and replace the cable.
- This appliance is intended for use up to an altitude of 2000 m above sea level.
- This appliance is not intended to be used on ships, boats or vessels.
- Do not install the appliance behind a decorative door in order to avoid overheating.
- Do not install the appliance on a platform.
- Do not operate the appliance by means of an external timer or separate remote-control system.
- WARNING: Unattended cooking on a hob with fat or oil can be dangerous and may result in fire.
- Never use water to extinguish the cooking fire. Switch off the appliance and cover flames with e.g. a fire blanket or lid.

- CAUTION: The cooking process has to be supervised. A short term cooking process has to be supervised continuously.
- WARNING: Danger of fire: Do not store items on the cooking surfaces.
- Do not use a steam cleaner to clean the appliance.
- Do not use harsh abrasive cleaners or sharp metal scrapers to clean the glass door or the glass of hinged lids of the hob since they can scratch the surface, which may result in shattering of the glass.
- Metallic objects such as knives, forks, spoons and lids should not be placed on the hob surface since they can get hot.
- WARNING: If the surface is cracked, switch off the appliance to avoid the possibility of electric shock. In case the appliance is connected to the mains directly using junction box, remove the fuse to disconnect the appliance from power supply. In either case contact the Authorised Service Centre.
- WARNING: The appliance and its accessible parts become hot during use. Care should be taken to avoid touching heating elements.
- Always use oven gloves to remove or insert accessories or ovenware.
- Before maintenance, cut the power supply.
- WARNING: Ensure that the appliance is switched off before replacing the lamp to avoid the possibility of electric shock.
- If the mains power supply cable is damaged, it must be replaced by the manufacturer, its Authorised Service Centre or similarly qualified persons to avoid an electrical hazard.
- Use only the food sensor (core temperature sensor) recommended for this appliance.
- Be careful when you touch the storage drawer. It can get hot.

- To remove the shelf supports first pull the front of the shelf support and then the rear end away from the side walls. Install the shelf supports in the opposite sequence.
- WARNING: Use only hob guards designed by the manufacturer of the cooking appliance or indicated by the manufacturer of the appliance in the instructions for use as suitable or hob guards incorporated in the appliance. The use of inappropriate guards can cause accidents.

2. SAFETY INSTRUCTIONS

2.1 Installation

⚠ **WARNING!**

Only a qualified person must install this appliance.

- Remove all the packaging.
- Do not install or use a damaged appliance.
- Follow the installation instructions supplied with the appliance.
- Always take care when moving the appliance as it is heavy. Always use safety gloves and enclosed footwear.
- Do not pull the appliance by the handle.
- The kitchen cabinet and the recess must have suitable dimensions.
- Keep the minimum distance from other appliances and units.
- Install the appliance in a safe and suitable place that meets installation requirements.
- Parts of the appliance carry current. Close the appliance with furniture to prevent touching the dangerous parts.
- The sides of the appliance must stay next to appliances or units with the same height.
- Do not install the appliance adjacent to a door or under a window. This prevents hot cookware to fall from the appliance when the door or the window is opened.
- Make sure to install a stabilizing means in order to prevent tipping of the appliance. Refer to Installation chapter.

2.2 Electrical Connection

⚠ **WARNING!**

Risk of fire and electric shock.

- All electrical connections should be made by a qualified electrician.
- The appliance must be earthed.
- Make sure that the parameters on the rating plate are compatible with the electrical ratings of the mains power supply.
- Always use a correctly installed shockproof socket.
- Do not use multi-plug adapters and extension cables.
- Do not let mains cables touch or come near the appliance door or the niche below the appliance, especially when it operates or the door is hot.
- The shock protection of live and insulated parts must be fastened in such a way that it cannot be removed without tools.
- Connect the mains plug to the mains socket only at the end of the installation. Make sure that there is access to the mains plug after the installation.
- If the mains socket is loose, do not connect the mains plug.
- Do not pull the mains cable to disconnect the appliance. Always pull the mains plug.
- Use only correct isolation devices: line protecting cut-outs, fuses (screw type fuses removed from the holder), earth leakage trips and contactors.
- The electrical installation must have an isolation device which lets you disconnect

the appliance from the mains at all poles. The isolation device must have a contact opening width of minimum 3 mm.
- Fully close the appliance door before you connect the mains plug to the mains socket.

2.3 Use

⚠ **WARNING!**

Risk of injury and burns.
Risk of electrical shock.

- Do not change the specification of this appliance.
- Make sure that the ventilation openings are not blocked.
- Do not let the appliance stay unattended during operation.
- Deactivate the appliance after each use.
- Be careful when you open the appliance door while the appliance is in operation. Hot air can release.
- Do not operate the appliance with wet hands or when it has contact with water.
- Do not use the appliance as a work surface or as a storage surface.
- Do not use aluminum foil or other materials between the cooking surface and the cookware, unless otherwise specified by the manufacturer of this appliance.
- Use only accessories recommended for this appliance by the manufacturer.
- Always use glass and jars approved for preserving purposes.

⚠ **WARNING!**

Risk of fire and explosion.

- Fats and oil when heated can release flammable vapours. Keep flames or heated objects away from fats and oils when you cook with them.
- The vapours that very hot oil releases can cause spontaneous combustion.
- Used oil, that can contain food remnants, can cause fire at a lower temperature than oil used for the first time.
- Do not put flammable products or items that are wet with flammable products in, near or on the appliance.
- Do not let sparks or open flames to come in contact with the appliance when you open the door.
- Open the appliance door carefully. The use of ingredients with alcohol can cause a mixture of alcohol and air.

⚠ **WARNING!**

Risk of damage to the appliance.

- To prevent damage or discoloration to the enamel:
  - do not put ovenware or other objects in the appliance directly on the bottom.
  - do not put aluminium foil directly on the bottom of cavity.
  - do not put water directly into the hot appliance.
  - do not keep moist dishes and food in the appliance after you finish the cooking.
  - be careful when you remove or install the accessories.
- Discoloration of the enamel or stainless steel has no effect on the performance of the appliance.
- Use a deep pan for moist cakes. Fruit juices cause stains that can be permanent.
- Do not keep hot cookware on the control panel.
- Do not let cookware boil dry.
- Be careful not to let objects or cookware fall on the appliance. The surface can be damaged.
- Do not activate the cooking zones with empty cookware or without cookware.
- Cookware made of cast iron, aluminium or with a damaged bottom can cause scratches. Always lift these objects up when you have to move them on the cooking surface.

2.4 Care and Cleaning

⚠ **WARNING!**

Risk of injury, fire, or damage to the appliance.

- Before maintenance, deactivate the appliance.
  Disconnect the mains plug from the mains socket.

- Make sure the appliance is cold. There is the risk that the glass panels can break.
- Replace immediately the door glass panels when they are damaged. Contact the Authorised Service Centre.
- Be careful when you remove the door from the appliance. The door is heavy!
- Fat and food remaining in the appliance can cause fire.
- Clean regularly the appliance to prevent the deterioration of the surface material.
- Make sure the cavity and the door are wiped dry after each use. Steam produced during the operation of the appliance condensates on cavity walls and can cause corrosion. To decrease the condensation operate the appliance for 10 minutes before cooking.
- Clean the appliance with a moist soft cloth. Use only neutral detergents. Do not use abrasive products, abrasive cleaning pads, solvents or metal objects.
- If you use an oven spray, follow the safety instructions on the packaging.
- Do not clean the catalytic enamel (if applicable) with any kind of detergent.

2.5 Internal lighting

⚠ **WARNING!**

Risk of electric shock.

- Concerning the lamp(s) inside this product and spare part lamps sold separately: These lamps are intended to withstand extreme physical conditions in household appliances, such as temperature, vibration, humidity, or are intended to signal information about the operational status of the appliance. They are not intended to be used in other applications and are not suitable for household room illumination.
- This product contains a light source of energy efficiency class G.
- Use only lamps with the same specifications.

2.6 Service

- To repair the appliance contact the Authorised Service Centre.
- Use original spare parts only.

2.7 Disposal

⚠ **WARNING!**

Risk of injury or suffocation.

- Contact your municipal authority for information on how to dispose of the appliance.
- Disconnect the appliance from the mains supply.
- Cut off the mains electrical cable close to the appliance and dispose of it.

3. INSTALLATION

⚠ **WARNING!**

Refer to Safety chapters.

3.1 Technical data

Dimensions	
Height	850 - 936 mm
Width	596 mm
Depth	600 mm

3.2 Electrical installation

⚠ **WARNING!**

The manufacturer is not responsible if you do not follow the safety precautions from Safety chapters.

This appliance is supplied with a main cable and without a main plug.

⚠ **WARNING!**

The power cable must not touch the part of the appliance shaded in the illustration.

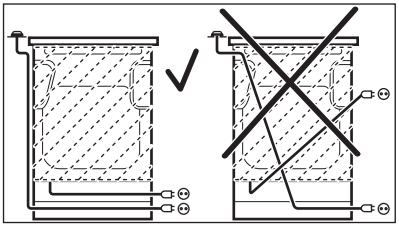

3.3 Anti-tilt protection

⚠ **CAUTION!**

Install the anti-tilt protection to prevent the appliance from falling under incorrect loads. The anti-tilt protection only works when the appliance is put in a correct area.
Your appliance has the symbols shown on the pictures (if applicable) to remind you about the installation of the anti-tilt protection.

ⓘ

Make sure you install the anti-tilt protection at the correct height.

For more information about the installation of the appliance refer to a separate installation booklet

4. PRODUCT DESCRIPTION

4.1 General overview

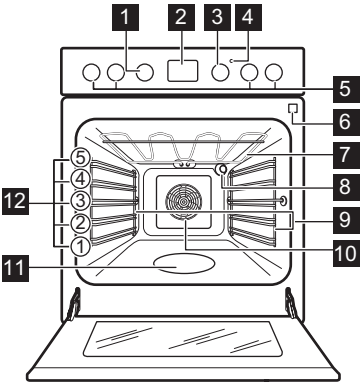

1 Knob for the oven functions

2 Display
3 Knob for the temperature
4 Temperature indicator / symbol
5 Knobs for the hob
6 Socket for the core temperature sensor
7 Heating element
8 Lamp
9 Shelf support, removable
10 Fan
11 Cavity embossment
12 Shelf positions

4.2 Hob overview

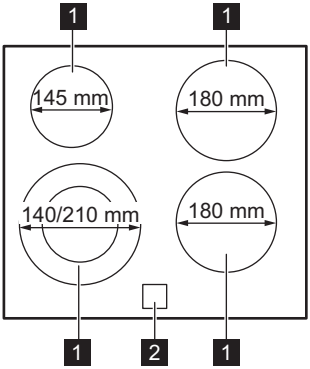

1 Cooking zone
2 Residual Heat Indicator

4.3 Accessories

- **Wire shelf**
  For cookware, cake tins, roasts.
- **Baking tray**
  For cakes and biscuits.
- **Grill- / Roasting pan**
  To bake and roast or as pan to collect fat.
- **BBQ rack**
  For grilling meat and vegetables.
- **Core temperature sensor**
  To measure how far the food is cooked.
- **Storage drawer**
  The storage drawer is below the oven cavity.

5. BEFORE FIRST USE

⚠ **WARNING!**

Refer to Safety chapters.

5.1 Initial preheating and cleaning

Preheat the empty appliance before the first use and contact with food. The appliance can emit unpleasant smell and smoke. Ventilate the room during preheating.

1. Remove all accessories and removable shelf supports from the appliance.
2. Set the function . Set the maximum temperature. Let the appliance operate for 1 h.
3. Set the function . Set the maximum temperature. Let the appliance operate for 15 min.
4. Set the function . Set the maximum temperature. Let the appliance operate for 15 min.
5. Turn off the appliance and wait until it is cold.
6. Clean the appliance and the accessories only with a microfibre cloth, warm water and a mild detergent.
7. Put the accessories and removable shelf supports back to their initial position.

5.2 Setting the time

You must set the time before you operate the oven.

The flashes when you connect the appliance to the electrical supply, when there was a power cut or when the timer is not set.

Press the + or — to set the correct time. After approximately five seconds, the flashing stops and the display shows the time of day you set.

5.3 Changing the time

> ⓘ
>
> You cannot change the time of day if any of the functions operates.

Press again and again until the indicator for the Time of Day function flashes.
To set a new time, refer to "Setting the time".

5.4 Opening and closing the door with the mechanical door lock

The mechanical door lock is activated by default.

To open the door move the lock to the right.

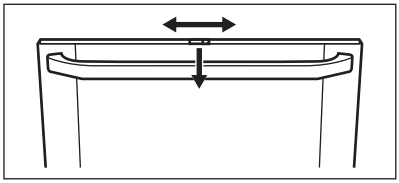

Close the door without pressing the lever.

5.5 Deactivating the mechanical door lock - in the main oven

1. Press the door trim B at each side. The seal releases.

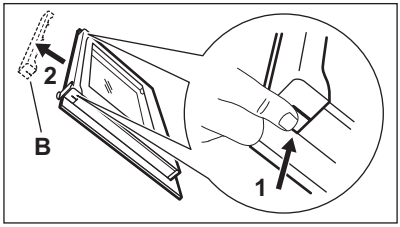

2. Pull the door trim up and remove it.
3. Remove the lever 1, move it to the right 2 and put it back in.

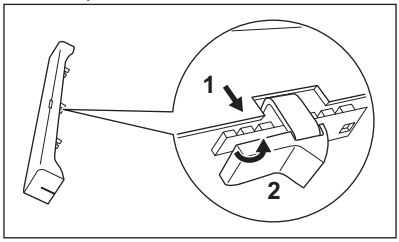

4. Hold the door trim B at each side and position it on the inner edge of the door. Put the door trim into the top edge of the door.

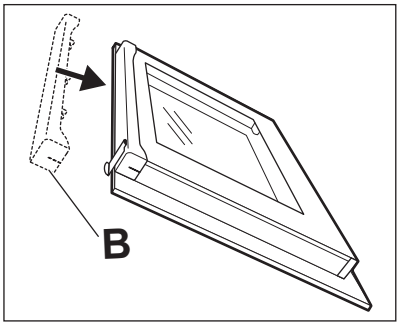

Activating the mechanical door lock

Do the above procedure again and move the lever back to the left.

Deactivating the appliance does not deactivate the mechanical door lock.

6. HOB - DAILY USE

WARNING!

Refer to Safety chapters.

6.1 Heat setting

Symbols	Function
0	Off position
◎	Double zone
∫	Keep warm
1 - 9	Heat settings

Use the residual heat to decrease energy consumption. Deactivate the cooking zone approximately 5 - 10 minutes before the cooking process is completed.

Turn the knob for the selected cooking zone to a necessary heat setting.
To complete the cooking process, turn the knob to the off position.

6.2 Activating and deactivating the outer rings

You can adjust the surface you cook to the dimension of the cookware.

To activate the outer ring: turn the knob clockwise through a light resistance to ◎ . Then turn the knob counterclockwise to the correct heat setting.

To deactivate the outer ring: turn the knob to the off position. The indicator goes out.

6.3 Residual heat indicator

WARNING!

As long as the indicator is visible, there is a risk of burns from residual heat.

The indicator appears when a cooking zone is hot, but it does not function if mains power is disconnected.

The indicator may also appear:
- for the neighbouring cooking zones even if you are not using them,
- when hot cookware is placed on cold cooking zone,
- when the hob is deactivated but the cooking zone is still hot.

The indicator disappears when the cooking zone has cooled down.

7. HOB - HINTS AND TIPS

WARNING!

Refer to Safety chapters.

7.1 Cookware

The cooking results depend on the cookware material

The bottom of the cookware must be as thick and flat as possible.
Ensure pan bases are clean and dry before placing on the hob surface.

Do not use cookware on the ceramic hob with bases with pronounced edges or ridges, e.g. cast iron pans. These could scratch or scour the hob surface permanently.

Cookware made of enamelled steel and with aluminium or copper bottoms can cause a colour change on the glass-ceramic surface.

To save energy and ensure that the hob operates properly the cookware bottom must have a suitable minimum diameter.

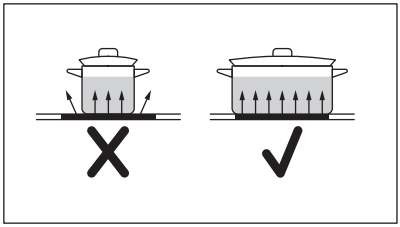

7.2 Minimum cookware diameter

Cooking zone	Cookware diameter (mm)	Power (W)
Left rear	125 - 145	1200
Right rear	150 - 180	1800
Right front	150 - 180	1800
Left front	140 - 210	1000/2200

7.3 Simplified cooking guide

The data in the table is for guidance only.

Heat setting	Use to:	Time (min)	Hints
⌠ - 1	Keep cooked food warm.	as necessary	Put a lid on the cookware.
1 - 2	Hollandaise sauce; melt: butter, chocolate, gelatine.	5 - 25	Mix from time to time.
2	Solidify: fluffy omelettes, baked eggs.	10 - 40	Cook with a lid on.
2 - 3	Simmer rice and milk-based dishes, heat up ready-cooked meals.	25 - 50	Add at least twice as much liquid as rice, mix milk dishes halfway through the procedure.
3 - 4	Stew vegetables, fish, meat.	20 - 45	Add a few tablespoons of water. Check the water amount during the process.
4 - 5	Steam potatoes and other vegetables.	20 - 60	Cover the bottom of the pot with 1-2 cm of water. Check the water level during the process. Keep the lid on the pot.
4 - 5	Cook larger quantities of food, stews and soups.	60 - 150	Up to 3 l of liquid plus ingredients.
6 - 7	Gentle fry: escalope, veal cordon bleu, cutlets, rissoles, sausages, liver, roux, eggs, pancakes, doughnuts.	as necessary	Turn over when needed.

Heat setting	Use to:	Time (min)	Hints
7 - 8	Heavy fry, hash browns, loin steaks, steaks.	5 - 15	Turn over when needed.
9	Boil water, cook pasta, sear meat (goulash, pot roast), deep-fry chips.		

8. HOB - CARE AND CLEANING

⚠ **WARNING!**

Refer to Safety chapters.

8.1 General information

- Clean the hob after each use.
- Always use cookware with a clean base.
- Scratches or dark stains on the surface have no effect on how the hob operates.
- Use a special cleaning agent suitable for the surface of the hob.
- Always use a scraper recommended for hobs with a glass surface. Use the scraper only as an additional tool for cleaning the glass after the standard cleaning procedure.

⚠ **WARNING!**

Do not use knives or any other sharp, metal tools to clean the glass surface.

8.2 Cleaning the hob

- **Remove immediately:** melted plastic, plastic foil, salt, sugar and food with sugar, otherwise, the dirt can cause damage to the hob. Take care to avoid burns. Use a special hob scraper on the glass surface at an acute angle and move the blade on the surface.
- **Remove when the hob is sufficiently cool:** limescale rings, water rings, fat stains, shiny metallic discoloration. Clean the hob with a moist cloth and a non-abrasive detergent. After cleaning, wipe the hob dry with a soft cloth.
- **Remove shiny metallic discoloration:** use a solution of water with vinegar and clean the glass surface with a cloth.

9. OVEN - DAILY USE

⚠ **WARNING!**

Refer to Safety chapters.

9.1 Oven functions

0 **Off position**
The oven is off.

True fan cooking
To bake on maximum two shelf positions simultaneously and to dry food.
Set the temperature 20 - 40 °C lower than for Conventional cooking.

Conventional cooking
To bake and roast food on one shelf position.

Pizza function
To bake pizza and other dishes that require more heat from below.

BBQ rack Function / Turbo grilling
To grill or roast food using BBQ rack. /
To roast larger meat joints or poultry with bones on one shelf position. To make gratin and to brown.

Fast grilling
To grill thin pieces of food in large quantities and to toast bread.

SteamBake
To add humidity during cooking. To get the right colour and crispy crust during baking. To give more juiciness during reheating.

Drying
To dry sliced food.

Moist fan baking
This function was used to comply with the Energy Efficiency Class and Ecodesign Regulations (according to EU 65/2014 and EU 66/2014).
Tests according to: IEC/EN 60350-1.
It is designed to save energy during cooking.
The oven door should be closed during cooking so that the function is not interrupted and the oven operates with the highest energy efficiency possible.
When you use this function, the temperature in the cavity may differ from the set temperature.
The heating power may be reduced. For general energy saving recommendations refer to "Energy Efficiency" chapter, Energy Saving.
For the cooking instructions refer to "Hints and tips" chapter, Moist fan baking.
When you use this function the lamp automatically turns off.

Function lock
To lock the oven and hob functions.

You can defrost food by choosing Moist fan baking function without setting the temperature.

9.2 Activating and deactivating the oven

It depends on the model if your appliance has knob symbols, indicators or lamps:
- The indicator comes on when the oven heats up.
- The lamp comes on when the oven operates.
- The symbol shows whether the knob controls one of the cooking zones, the oven functions or the temperature.

1. Turn the knob for the oven functions to select an oven function.
2. Turn the knob for the temperature to select a temperature.
3. To deactivate the oven turn the knobs for the oven functions and temperature to the off position.

9.3 Activating the function: SteamBake

This function increases humidity while cooking.

WARNING!
Risk of burns and damage to the appliance.

Released humidity can cause burns:
- Do not open the appliance door when using the function: SteamBake.
- Open the appliance door carefully after using the function: SteamBake.

Refer to “Hints and tips” chapter.

1. Open the oven door.
2. Fill the cavity embossment with tap water. The maximum capacity of the cavity embossment is 250 ml.
   Fill the cavity embossment with water only when the oven is cold.
3. Turn the function knob: SteamBake.
4. Turn the temperature knob to set a temperature.
5. Put food in the appliance and close the oven door.

CAUTION!
Do not refill the cavity embossment with water during cooking or when the oven is hot.

6. To turn off the appliance, turn the knobs for the oven functions and temperature to the off position.
7. Remove water from the cavity embossment.

WARNING!
Make sure that the appliance is cold before you remove the remaining water from the cavity embossment.

9.4 Locking the oven and hob

The knob for the oven functions has a built-in Function lock.

ⓘ

The Function lock does not deactivate the main power supply of the cooker.

Turn the knob to the symbol ⊡.
The knob comes out approximately 2 mm.
Unlocking the oven and hob: Press the knob and turn it to the necessary position.

9.5 Cooling fan

When the oven operates, the cooling fan turns on automatically to keep the surfaces of the oven cool. If you turn off the oven, the cooling fan continues to operate until the oven cools down.

9.6 Using the core temperature sensor

The core temperature sensor measures the core temperature of the meat.

There are two temperatures to be set:

- The oven temperature. Refer to the table for roasting.
- The core temperature. Refer to the table for the core temperature sensor.

⚠ **CAUTION!**

Only use the core temperature sensor supplied with the appliance, or genuine replacement parts.

1. Put the point of the core temperature sensor into the centre of the meat.
2. Put the plug of the core temperature sensor into the socket on the front of the appliance. The indicator for the core temperature sensor flashes.

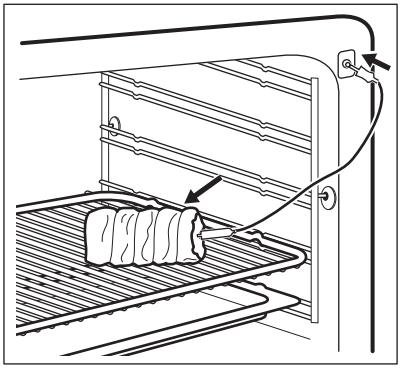

3. Press the button + or — to set the core temperature.
   You can set the temperature from 30 °C to 99 °C. Refer to values in the table.
4. Set the oven function and the oven temperature.
5. Press a button to stop the signal.
   An acoustic signal sounds for two minutes, when the meat is at the set core temperature.
6. Deactivate the appliance.
7. Remove the plug of the core temperature sensor from the socket. Remove the meat from the appliance.

If the meat is not cooked to your satisfaction, do the above steps again and set a higher core temperature.

You can change the temperature at any time during the cooking. Press to change the set core temperature.

⚠ **WARNING!**

Be careful when you remove the tip and plug of the core temperature sensor. The core temperature sensor is hot. There is a risk of burns.

9.7 Inserting the oven accessories

Deep pan:

Push the deep pan between the guide bars of the shelf support.

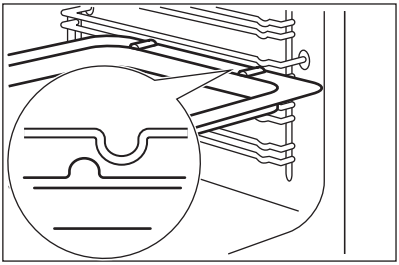

Wire shelf:

Push the shelf between the guide bars of the shelf support.

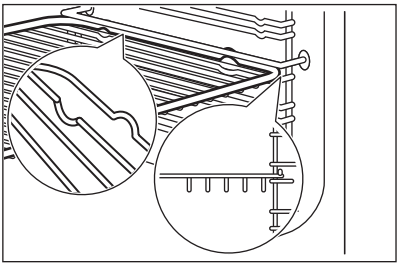

ⓘ

- All accessories have small indentations at the top of the right and left side to increase safety. The indentations are also anti-tip devices.
- The high rim around the shelf is a device which prevents cookware from slipping.

9.8 Inserting the BBQ rack

⚠ **WARNING!**

Be careful when you use the skewer of the kit. They are sharp. There is a risk of injury.

⚠ **WARNING!**

Use oven gloves when you remove the BBQ rack.The shelf, box, skewers and grill are hot. There is a risk of burns.

⚠ **CAUTION!**

For cooking hints refer to "Oven - Hints and tips" chapter.

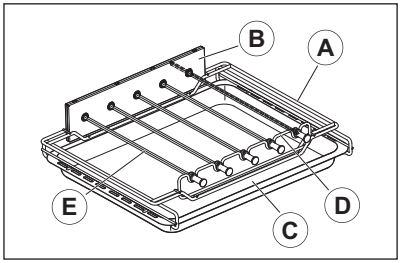

A. Frame
B. Gearbox
C. Tray
D. Skewer support
E. Skewer (1 long and 4 short)

1. Slide the tray in the frame on the side.

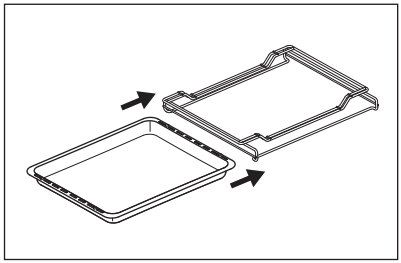

2. Insert the gearbox in the back large slot.
3. Insert the skewer support in the front narrow slot.

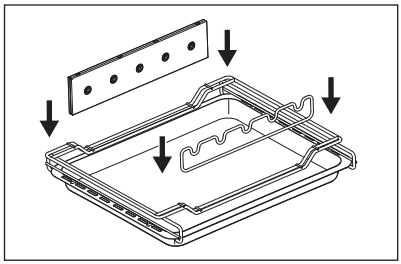

4. Insert the food on the skewers between the skewer handle and the markings which are close to the tip of the skewer. Make sure that the food does not touch the pieces of food from the adjacent

skewer. It can affect the rotation.

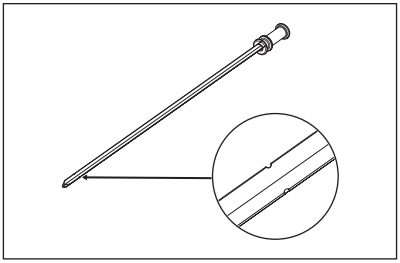

5. Insert the spits in the correspondent holes in the gearbox and place the turnspit handle groove in the front skewer support. The long skewer must be assembled in the first hole on the right (see the picture).

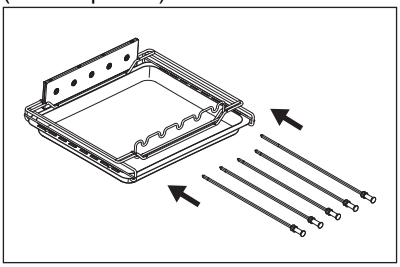

6. Open the oven door.
7. Put the BBQ rack on the shelf position 4 starting from the bottom and push it to the end.

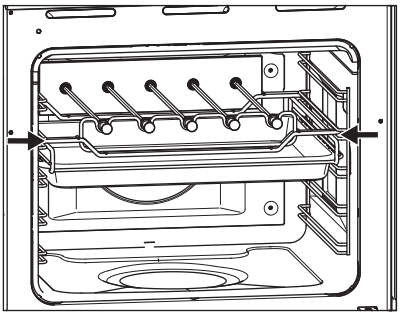

8. If something blocks, slightly rotate the skewer from the right to fit it with the motor shaft and push again.

> ⓘ
> Make sure the BBQ rack is correctly inserted before you close the door.

9. Close the oven door.
10. Turn the knob for the oven functions to the BBQ rack function and set the knob for temperature to the BBQ position (approx. 225°C). Do not exceed 225°C to avoid overcooking food and BBQ rack overheating.
11. Make sure the skewers rotate.
12. When the food is ready, turn the knobs for the oven functions and temperature to the off position. Wear the oven gloves
13. Open the door partially to let the vapour come out.

Once there is no vapour, fully open the door. Carefully remove the BBQ rack from the oven and then remove each skewer from the rack. The rack is hot, please consider to protect the surfaces were you sit the rack.

10. OVEN - CLOCK FUNCTIONS

10.1 Display

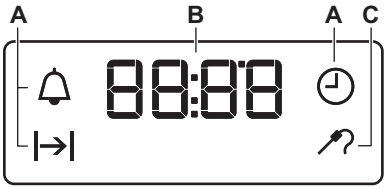

A. Clock functions
B. Timer
C. Food sensor indicator

10.2 Buttons

Button	Function	Description
—	MINUS	To set the time.
	CLOCK	To set a clock function.
+	PLUS	To set the time.

10.3 Clock functions

Clock function		Application
	TIME OF DAY	To set, change or check the time of day.
	DURATION	To set how long the oven works.
	MINUTE MINDER	To set a countdown. This function has no effect on the operation of the oven. You can set this function at any time, also when the oven is off.

10.4 Setting the DURATION

1. Set an oven function and temperature.
2. Press again and again until starts to flash.
3. Press + or — to set the DURATION time.

The display shows .

4. When the time ends, flashes and an acoustic signal sounds. The appliance deactivates automatically.
5. Press any button to stop the acoustic signal.
6. Turn the knob for the oven functions and the knob for the temperature to the off position.

10.5 Setting the MINUTE MINDER

1. Press again and again until starts to flash.
2. Press + or — to set the necessary time.

The Minute Minder starts automatically after 5 seconds.

3. When the set time ends, an acoustic signal sounds. Press any button to stop the acoustic signal.

4. Turn the knob for the oven functions and the knob for the temperature to the off position.

10.6 Cancelling the clock functions

1. Press the again and again until the necessary function indicator starts to flash.
2. Press and hold —.

The clock function goes out after some seconds.

11. OVEN - HINTS AND TIPS

WARNING!

Refer to Safety chapters.

The temperature and baking times in the tables are guidelines only. They depend on the recipes and the quality and quantity of the ingredients used.

11.1 Moist fan baking

Bread and pizza

Food	Temperature (°C)	Time (min)	Shelf position
Buns	180	25 - 35	3
Frozen pizza 350 g	190	25 - 35	3

Cakes in baking tray

Food	Temperature (°C)	Time (min)	Shelf position
Swiss roll	180	20 - 30	3
Brownie	180	30 - 40	3

Cakes in tin

Food	Temperature (°C)	Time (min)	Shelf position
Soufflè	200	30 - 40	3
Sponge flan base	180	20 - 30	3
Victoria sandwich	150	25 - 35	3

Fish

Food	Temperature (°C)	Time (min)	Shelf position
Fish in pouches 300 g	180	25 - 35	3
Whole fish 200 g	180	25 - 35	3
Fish fillet 300 g	180	25 - 35	3

Meat

Food	Temperature (°C)	Time (min)	Shelf position
Meat in pouch 250 g	200	25 - 35	3
Meat skewers 500 g	200	30 - 40	3

Small baked items

Food	Temperature (°C)	Time (min)	Shelf position
Cookies	180	25 - 35	3
Macaroons	160	25 - 35	3
Muffins	180	25 - 35	3
Savoury cracker	170	20 - 30	3
Short crust pastry biscuits	150	25 - 35	3
Tartelettes	170	15 - 25	3

Vegetarian

Food	Temperature (°C)	Time (min)	Shelf position
Mixed vegetables in pouch 400 g	180	25 - 35	3
Omelette	200	20 - 30	3
Vegetables on tray 700 g	180	25 - 35	3

11.2 SteamBake

Bakery

Food	Temperature (°C)	Water in the cavity embossment (ml)	Preheating time (min)	Time (min)	Shelf position
White bread	180	150	10	30 - 40	2
Bread rolls	200	150	5	20 - 25	2
Focaccia	190	150	10	20 - 25	1
Homemade pizza	230	150	10	15 - 20	2
Cookies, scones, croissant	160	150	10	10 - 20	2
Plum cake, cinnamon rolls	160	150	10	70 - 80	2

Frozen foods

Food	Temperature (°C)	Water in the cavity embossment (ml)	Preheating time (min)	Time (min)	Shelf position
Pizza	200	100	10	15	2
Croissant	170	50	10	25	2
Lasagne	200	200	10	35 - 45	2

Food regeneration

Food	Temperature (°C)	Water in the cavity embossment (ml)	Preheating time (min)	Time (min)	Shelf position
White bread	110	100	-	30 - 40	2
Bread rolls	110	100	-	20 - 25	2
Homemade pizza	110	100	-	15 - 20	2
Focaccia	110	100	-	20 - 30	2
Vegetables	110	100	-	15 - 25	2
Rice	110	100	-	15 - 26	2
Pasta	110	100	-	15 - 27	2
Meat	110	100	-	15 - 28	2

Roasting

Food	Temperature (°C)	Water in the cavity embossment (ml)	Preheating time (min)	Time (min)	Shelf position
Chicken	210	200	-	70 - 75	2
Half chicken	210	200	-	35 - 50	2
Roast pork	180	200	-	65 - 70	2
Roast beef 1 - 1,5 kg 1. Rare 2. Medium 3. Well done	200	200	-	1. 50 - 55 2. 60 - 65 3. 65 - 70	2
Roast turkey	200	200	-	70 - 85	2

11.3 BBQ rack

Food	Quantity (g) 1)	Knob position / Temperature (°C)	Time (min)	Shelf position
Shish Tawook	200 - 250	/ 225	15 - 25	4
Kofta	100 - 130	/ 225	10 - 20	4
Grilled Kebab	100 - 130	/ 225	15 - 25	4
Bavarian Sausages	200 - 220	/ 225	15 - 25	4
Picanha	200 - 250	/ 225	10 - 20	4
Bacon	160 - 180	/ 225	15 - 25	4
Italian Sausages	220 - 240	/ 225	20 - 30	4
Vegetable Kebab	130 - 150	/ 225	10 - 20	4
Squid Kebab	130 - 150	/ 225	10 - 20	4
Octopus Kebab	130 - 150	/ 225	10 - 20	4
Fruit Kebab	130 - 150	/ 225	10 - 20	4

1) Quantity suggested per one skewer. Spread the food evenly along the entire length of the skewer and make sure the quantity does not cause rotation issues.

11.4 Information for test institutes

Food	Function	Temperature (°C)	Time (min)	Accessories	Shelf position
Small cakes (20 small cakes per tray)	Conventional cooking	170	20 - 30	Tray	4
Small cakes (20 small cakes per tray)1)	True fan cooking	150	20 - 30	Tray	2
Small cakes (20 small cakes per tray)1)	True fan cooking	150	25 - 35	Tray / Dripping Pan	1 + 4
Apple pie, 2 tins (ø 20 cm) on the grid, diagonally shifted	Conventional cooking	180	70 - 90	Grid	1
Apple pie, 2 tins (ø 20 cm) on the grid, diagonally shifted	True fan cooking	160	70 - 90	Grid	2

Food	Function	Temperature (°C)	Time (min)	Accessories	Shelf position
Apple pie, 2 tins (ø 20 cm) on the grid, diagonally shifted	Pizza function	160	60 - 80	Grid	2
Fatless sponge cake, 1 tin (ø 26 cm) on the grid	Conventional cooking	170	30 - 40	Grid	3
Fatless sponge cake, 1 tin (ø 26 cm) on the grid	True fan cooking	150	35 - 45	Grid	2
Fatless sponge cake, 1 tin (ø 26 cm) on the grid [1]	True fan cooking	160	25 - 35	Grid	1 + 4
Shortbread/Pastry strip	True fan cooking	140	20 - 35	Tray	3
Shortbread/Pastry strip	True fan cooking	140	20 - 30	Tray	1 + 4
Shortbread/Pastry strip	Conventional cooking	160	20 - 35	Tray	3
Toast[1]	Fast grilling	Max	1 - 5	Grid	4
Beef burger	Grilling	Max	15 - 20 first side. 10 - 15 second side.	Grid / Dripping pan	4 + 1

[1] Preheat the oven for 10 minutes.

12. OVEN - CARE AND CLEANING

⚠ **WARNING!**

Refer to Safety chapters.

12.1 Notes on cleaning

Cleaning Agents

- Clean the front of the appliance only with a microfibre cloth with warm water and a mild detergent. Clean and check the door gasket around the frame of the cavity.
- Use a cleaning solution to clean metal surfaces.
- Clean stains with a mild detergent. Do not apply it on the catalytic surfaces.

Everyday Use

- Clean the cavity after each use. Fat accumulation or other residue may cause fire.
- Do not store food in the appliance for longer than 20 minutes. Dry the cavity only with a microfibre cloth after each use.

Accessories

- Clean all accessories after each use and let them dry. Use only a microfibre cloth with warm water and a mild detergent. Do not clean the accessories in a dishwasher .
- Do not clean the non-stick accessories using abrasive cleaner or sharp-edged objects.

12.2 Stainless steel or aluminium ovens

Clean the oven door with a damp cloth or sponge only. Dry it with a soft cloth.

Do not use steel wool, acids or abrasive materials as they can damage the oven surface. Clean the oven control panel with the same precautions.

12.3 Catalytic cleaning

⚠ **CAUTION!**

Do not clean the catalytic surface with oven sprays, soap or other cleaning agents. It will damage the catalytic surface.

⚠ **CAUTION!**

Always turn the oven light on while using the catalytic cleaning (if applicable).

⚠ **WARNING!**

Keep children away when you clean the oven at a high temperature. The oven surface becomes very hot and there is a risk of burns.

ⓘ

Spots or discolouration of the catalytic surface have no effect on catalytic properties.

ⓘ

Before activating the catalytic cleaning remove all the accessories from the oven.

The walls with catalytic coating are self-cleaning. They absorb fat which collects on the walls while the appliance operates.

To support the self-cleaning procedure, heat the empty oven on a regular basis.

1. Clean the oven floor with warm water and washing-up liquid, then dry it.
2. Set the ▭ function.
3. Set the oven temperature to 250 °C and let the oven operate for 1 hour.
4. When the appliance is cool, clean it with a soft and moist sponge.

12.4 Cleaning the cavity embossment

The cleaning procedure removes limestone residue from the cavity embossment after cooking with steam.

ⓘ

For the function: SteamBake we recommend to do the cleaning procedure at least every 5 - 10 cooking cycles.

1. Put 250 ml of white vinegar into the cavity embossment at the bottom of the oven. Use maximum 6% vinegar without any additives.
2. Let the vinegar dissolve the residual limestone at the ambient temperature for 30 minutes.
3. Clean the cavity with warm water and a soft cloth.

12.5 Cleaning the BBQ rack

⚠ **WARNING!**

Clean the accessory after each use.

⚠ **WARNING!**

Be careful when you clean the skewers. They are sharp. There is a risk of injury.

1. Disassemble the BBQ rack.
2. Soak the accessory in soapy water before cleaning.
3. Clean the BBQ rack components with a sponge or use a non-abrasive brush to remove scraps.

It is also possible to clean the gearbox, skewers and skewer support in the dishwasher.

12.6 Removing the shelf supports

To clean the oven, remove the shelf supports.

1. Pull the front of the shelf support away from the side wall.

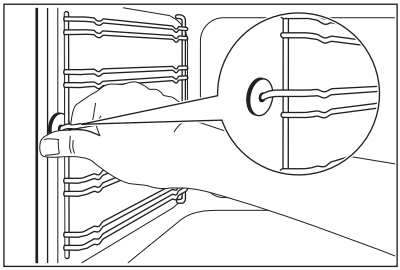

2. Pull the rear end of the shelf support away from the side wall and remove it.

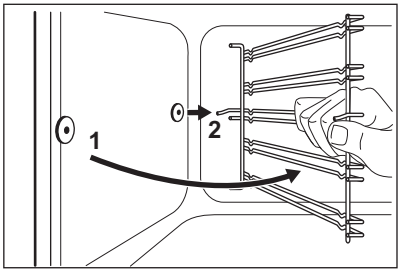

Install the shelf supports in the opposite sequence.

> ⚠ **CAUTION!**
>
> Make sure that the longer fixing wire is in the front. The ends of the two wires must point to the rear. Incorrect installation can cause damage to the enamel.

12.7 Removing the oven door

To make the cleaning easier, remove the door.

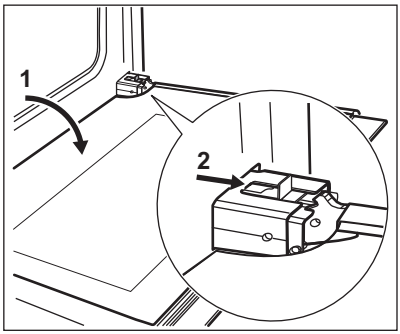

1. Open the door fully.
2. Move the slider until you hear a click.
3. Close the door until the slider locks.
4. Remove the door.
   To remove the door, pull the door outwards first from one side, and then the other.

When the cleaning procedure is completed, insert the oven door in the opposite sequence. Make sure that you hear a click when you insert the door. Use force if necessary.

12.8 Removing and cleaning the door glasses

> ⓘ
>
> The door glass in your product can be different in type and shape from the examples you see in the images. The number of glasses can also be different.

1. Hold the door trim B on the top edge of the door at the two sides and push inwards to release the clip seal.

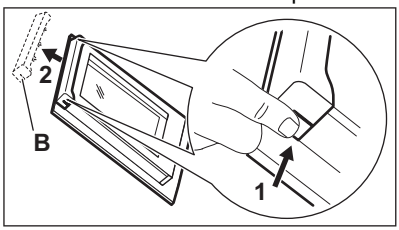

2. Pull the door trim to the front to remove it.
3. Hold the door glass panels on their top edge one by one and pull them upwards from the guide.

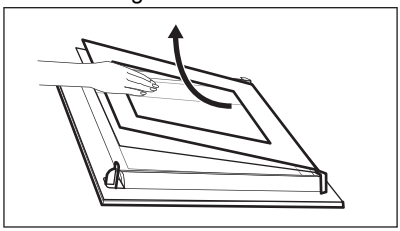

4. Clean the door glass panels.

To install panels, do the same steps in reverse.

12.9 Replacing the lamp

> ⚠ **WARNING!**
>
> Risk of electric shock.
> The lamp can be hot.

1. Turn off the oven. Wait until the oven is cold.
2. Disconnect the oven from the mains.
3. Put a cloth on the bottom of the cavity.

The back lamp

ⓘ

The lamp glass cover is at the back of the cavity.

1. Turn the lamp glass cover counterclockwise to remove it.
2. Clean the glass cover.
3. Replace the oven lamp with a suitable 300 °C heat-resistant oven lamp. Use the same oven lamp type.
4. Install the glass cover.

12.10 The drawer

⚠ **WARNING!**

Do not put food inside the drawer.

⚠ **WARNING!**

Do not keep flammable items such as cleaning materials, plastic bags, oven gloves, paper, cleaning products, aerosols, plastic items) in the drawer. When you use the oven, the drawer can become hot. There is a risk of fire.

The drawer below the oven can be removed for cleaning.

Removing the drawer:

1. Pull the drawer out until it stops.
2. Lift the drawer slightly, so that can be lifted upwards at an angle of the drawer guides.

To install the drawer, follow the procedure in reverse.

13. TROUBLESHOOTING

⚠ **WARNING!**

Refer to Safety chapters.

13.1 What to do if...

Problem	Possible cause	Remedy
You cannot activate the appliance.	The appliance is not connected to an electrical supply or it is connected incorrectly.	Check if the appliance is correctly connected to the electrical supply.
You cannot activate the appliance.	The fuse is blown.	Make sure that the fuse is the cause of the malfunction. If the fuse is blown again and again, contact a qualified electrician.
Residual heat indicator does not come on.	The zone is not hot because it operated only for a short time.	If the zone operated sufficiently long to be hot, speak to an Authorised Service Centre.
You cannot activate the outer ring.		Activate the inner ring first.
The oven does not heat up.	The oven is deactivated.	Activate the oven.
The oven does not heat up.	The clock is not set.	Set the clock.
The oven does not heat up.	The necessary settings are not set.	Make sure that the settings are correct.
The lamp does not operate.	The lamp is defective.	Replace the lamp.
The display shows "12.00".	There was a power cut.	Reset the clock.

Problem	Possible cause	Remedy
The display shows F11.	The plug of the core temperature sensor is not correctly installed into the socket.	Put the plug of the core temperature sensor as far as possible into the socket.
Steam and condensation settle on the food and in the cavity of the oven.	You left the dish in the oven for too long.	Do not leave the dishes in the oven for longer than 15 - 20 minutes after the cooking process ends.
There is no good cooking performance using the SteamBake function.	You did not fill the cavity embossment with water.	Refer to "Activating the SteamBake function".
The water in the cavity embossment does not boil.	The temperature is too low.	Set the temperature at least to 110°C. Refer to "Oven - Hints and tips" chapter.
The water comes out of the cavity embossment.	There is to much water in the cavity embossment.	Deactivate the oven and make sure that the appliance is cold. Wipe the water with a cloth or sponge. Add the correct amount of water to the cavity embossment. Refer to "Activating the SteamBake function".

13.2 Service data

If you cannot find a solution to the problem yourself, contact your dealer or an Authorised Service Centre.

The necessary data for the service centre is on the rating plate. The rating plate is on the front frame of the appliance cavity. Do not remove the rating plate from the appliance cavity.

We recommend that you write the data here:	
Model (MOD.)	.....
Product number (PNC)	.....
Serial number (S.N.)	.....

14. ENERGY EFFICIENCY

14.1 Product Information according to EU Ecodesign Regulations for Hob

Model identification	LKR66449NW	
Type of hob	Hob inside Freestanding Cooker	
Number of cooking zones	4	
Heating technology	Radiant Heater	
Diameter of circular cooking zones (Ø)	Left front Left rear Right front Right rear	21.0 cm 14.5 cm 18.0 cm 18.0 cm
Energy consumption per cooking zone (EC electric cooking)	Left front Left rear Right front Right rear	178.9 Wh/kg 181.8 Wh/kg 182.1 Wh/kg 172.7 Wh/kg
Energy consumption of the hob (EC electric hob)		178.9 Wh/kg

IEC/EN 60350-2 - Household electric cooking appliances - Part 2: Hobs - Methods for measuring performance.

14.2 Hob - Energy saving

You can save energy during everyday cooking if you follow the hints below.

- When you heat up water, use only the amount you need.
- If it is possible, always put the lids on the cookware.
- Before you activate the cooking zone put the cookware on it.
- The cookware bottom should have the same diameter as the cooking zone.
- Put the smaller cookware on the smaller cooking zones.
- Put the cookware directly in the centre of the cooking zone.
- Use the residual heat to keep the food warm or to melt it.

14.3 Product Information Sheet and Product Information according to EU Energy Labelling and Ecodesign Regulations for Oven

Supplier's name	Electrolux
Model identification	LKR66449NW 947941506
Energy Efficiency Index	95.3
Energy efficiency class	A
Energy consumption with a standard load, conventional mode	0.95 kWh/cycle
Energy consumption with a standard load, fan-forced mode	0.82 kWh/cycle
Number of cavities	1
Heat source	Electricity
Volume	73 l
Type of oven	Oven inside Freestanding Cooker
Mass	59.25 kg

IEC/EN 60350-1 - Household electric cooking appliances - Part 1: Ranges, ovens, steam ovens and grills - Methods for measuring performance.

14.4 Oven - Energy saving

Following tips below will help you save energy when using your appliance.

Make sure that the appliance door is closed when the appliance operates. Do not open the appliance door too often during cooking. Keep the door gasket clean and make sure it is well fixed in its position.

Use metal cookware and dark, non-reflective tins and containers to improve energy saving.

Do not preheat the appliance before cooking unless specifically recommended.

Keep breaks between baking as short as possible when you prepare a few dishes at one time.

Cooking with fan
When possible, use the cooking functions with fan to save energy.

Residual heat
When the cooking duration is longer than 30 min, reduce the appliance temperature to minimum 3 - 10 min before the end of cooking. The residual heat inside the appliance will continue to cook.

Use the residual heat to keep the food warm or warm up other dishes.

Keep food warm
Choose the lowest possible temperature setting to use residual heat and keep the food warm.

Moist fan baking
Function designed to save energy during cooking.

14.5 Product Information for power consumption and maximum time to reach applicable low power mode

Power consumption in standby	0.8 W
Maximum time needed for the equipment to automatically reach the applicable low power mode	20 min

15. ENVIRONMENTAL CONCERNS

Recycle materials with the symbol ♲. Put the packaging in relevant containers to recycle it. Help protect the environment and human health by recycling waste of electrical and electronic appliances. Do not dispose of appliances marked with the symbol with the household waste. Return the product to your local recycling facility or contact your municipal office.

Electrolux Appliances AB - Contact Address: Al. Powstancow Slaskich 26, 30-570 Krakow, Poland

electrolux.com

867363600-C-192024