Electrolux

electrolux.com/register

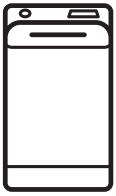

EW8T663G1G

EN User Manual | **Washing Machine**

Welcome to Electrolux! Thank you for choosing our appliance.

Get usage advice, brochures, troubleshooting, service and repair information:
www.electrolux.com/support

Subject to change without notice.

CONTENTS

1. SAFETY INFORMATION..... 2
2. SAFETY INSTRUCTIONS..... 4
3. PRODUCT DESCRIPTION..... 6
4. TECHNICAL DATA..... 8
5. INSTALLATION..... 8
6. CONTROL PANEL..... 11
7. DIAL AND BUTTONS..... 13
8. PROGRAMMES..... 16
9. SETTINGS..... 21
10. BEFORE FIRST USE..... 22
11. DAILY USE..... 22
12. HINTS AND TIPS..... 27
13. CARE AND CLEANING..... 29
14. TROUBLESHOOTING..... 32
15. CONSUMPTION VALUES..... 35
16. QUICK GUIDE..... 36
17. ENVIRONMENTAL CONCERNS..... 38

1. ⚠ SAFETY INFORMATION

Before beginning the installation and use of this appliance, carefully read the supplied instructions.
The manufacturer is not responsible for any injuries or damage that are the result of incorrect installation or usage.
Always keep the instructions in a safe and accessible location for future reference.

1.1 Children and vulnerable people safety

- This appliance can be used by children aged from 8 years and above and persons with reduced physical, sensory or mental capabilities or lack of experience and knowledge if they have been given supervision or instruction concerning

the use of the appliance in a safe way and understand the hazards involved.

- Children between 3 and 8 years of age and persons with very extensive and complex disabilities shall be kept away from the appliance unless continuously supervised.
- Children of less than 3 years of age should be kept away from the appliance unless continuously supervised.
- Children should be supervised to ensure that they do not play with the appliance.
- Keep all packaging away from children and dispose of it appropriately.
- Keep detergents away from children.
- Keep children and pets away from the appliance when the door is open.
- If the appliance has a child safety device, it should be activated.
- Children shall not carry out cleaning and user maintenance of the appliance without supervision.

1.2 General Safety

- This appliance is for washing domestic-type, machine-washable laundry only.
- This appliance is designed for single household domestic use in an indoor environment.
- This appliance may be used in offices, hotel guest rooms, bed & breakfast guest rooms, farm guest houses and other similar accommodation where such use does not exceed (average) domestic usage levels.
- Do not change the specification of this appliance.
- The appliance maximum load is 6 kg. Do not exceed the maximum load of each programme (refer to the “Programmes” chapter).
- The operating water pressure at the water entry point from the outlet connection must be between 0.5 bar (0.05 MPa) and 10 bar (1.0 MPa).

- The ventilation opening in the base must not be covered by a carpet, mat, or any floor covering.
- The appliance must be connected to the water mains using the new supplied hose sets, or other new hose sets supplied by the Authorised Service Centre.
- Old hose sets must not be reused.
- If the mains power supply cable is damaged, it must be replaced by the manufacturer, its Authorised Service Centre or similarly qualified persons to avoid an electrical hazard.
- Before any maintenance operation, deactivate the appliance and disconnect the mains plug from the socket.
- Do not use high pressure water sprays and/or steam to clean the appliance.
- Clean the appliance with a moist cloth. Use only neutral detergents. Do not use abrasive products, abrasive cleaning pads, solvents or metal objects.

2. SAFETY INSTRUCTIONS

2.1 Installation

ⓘ

The installation must comply with relevant national regulations.

- Remove all the packaging and the transit bolts including rubber bush with plastic spacer.
- Keep the transit bolts in a safe place. If the appliance is to be moved in the future they must be reattached to lock the drum to prevent an internal damage.
- Always take care when moving the appliance as it is heavy. Always use safety gloves and enclosed footwear.
- Follow the installation instructions supplied with the appliance.
- Do not install or use a damaged appliance.
- Do not install or use the appliance where the temperature can be less than 0°C or where it is exposed to the weather.
- The floor area on which the appliance is to be installed must be flat, stable, heat resistant and clean.
- Make sure that there is air circulation between the appliance and the floor.
- When the appliance is in its permanent position, check if it is levelled correctly with the aid of a spirit level. If it is not, adjust the feet accordingly.
- Do not install the appliance directly above a floor drain.
- Do not spray water on the appliance and do not expose it to excessive humidity.
- Do not install the appliance where the appliance lid cannot be fully opened.
- Do not put a closed container to collect possible water leakage under the appliance. Contact the Authorised Service Centre to ensure which accessories can be used.

2.2 Electrical connection

⚠ **WARNING!**

Risk of fire and electric shock.

- WARNING: This appliance is designed to be installed / connected to a grounding connection in the building.
- Always use a correctly installed shockproof socket.
- Make sure that the parameters on the rating plate are compatible with the electrical ratings of the mains power supply.
- Do not use multi-plug adapters and extension cables.
- Make sure not to cause damage to the mains plug and to the mains cable. Should the mains cable need to be replaced, this must be carried out by our Authorised Service Centre.
- Connect the mains plug to the mains socket only at the end of the installation. Make sure that there is access to the mains plug after the installation.
- Do not touch the mains cable or the mains plug with wet hands.
- Do not pull the mains cable to disconnect the appliance. Always pull the mains plug.

2.3 Water connection

- The inlet water shall not exceed 25 °C.
- Do not cause damage to the water hoses.
- Before connection to new pipes, pipes not used for a long time, where repair work has been carried out or new devices fitted (water meters, etc.), let the water flow until it is clean and clear.
- Ensure that there are no visible water leaks during and after the first use of the appliance.
- Do not use an extension hose if the inlet hose is too short. Contact the Authorised Service Centre for the replacement of the inlet hose.
- When unpacking the appliance, It is possible to see water flowing from the drain hose. This is due to the testing of the appliance with the use of water in the factory.
- You can extend the drain hose to maximum 400 cm. Contact the Authorised Service Centre for the other drain hose and the extension.
- Make sure that there is access to the tap after the installation.

2.4 Use

⚠ WARNING!

Risk of injury, electric shock, fire, burns or damage to the appliance.

- Follow the safety instructions on the detergent packaging.
- Do not put flammable products or items that are wet with flammable products in, near or on the appliance.
- Do not wash fabrics which are heavily soiled with oil, grease or other greasy substances. It can damage rubber parts of the appliance. Prewash such fabrics by hand before loading them into the appliance.
- Do not use laundry fragrances to avoid the risk of damaging plastic and rubber parts of the appliance.
- Make sure that all metal objects are removed from the laundry.

2.5 Service

- To repair the appliance contact the Authorised Service Centre. Use original spare parts only.
- Please note that self-repair or non-professional repair can have safety consequences and might void the guarantee.
- The following spare parts are available for at least 10 years after the model has been discontinued: motor and motor brushes, transmission between motor and drum, pumps, shock absorbers and springs, washing drum, drum spider and related ball bearings, heaters and heating elements, including heat pumps, piping and related equipment including hoses, valves, filters and aquastops, printed circuit boards, electronic displays, pressure switches, thermostats and sensors, software and firmware including reset software, door, door hinge and seals, other seals, door locking assembly, plastic peripherals such as detergent dispensers. The duration may be longer in your country. For further information, please visit our website.
- Please note that some of these spare parts are only available to professional

repairers, and that not all spare parts are relevant for all models.

- Concerning the lamp(s) inside this product and spare part lamps sold separately: These lamps are intended to withstand extreme physical conditions in household appliances, such as temperature, vibration, humidity, or are intended to signal information about the operational status of the appliance. They are not intended to be used in other applications and are not suitable for household room illumination.

2.6 Disposal

⚠ **WARNING!**

Risk of injury or suffocation.

- Disconnect the appliance from the mains electrical and water supplies.
- Cut off the mains electrical cable close to the appliance and dispose of it.
- Remove the door catch to prevent children or pets from becoming trapped in the drum.
- Dispose of the appliance in accordance with local requirements for the disposal of Waste Electrical and Electronic Equipment (WEEE).

3. PRODUCT DESCRIPTION

3.1 Special features

Your new washing machine meets all modern requirements for an effective treatment of laundry with low water, energy and detergent consumption and will care for fabrics.

- Thanks to the **Soft Plus option**, the fabric softener is uniformly spread out in the laundry and deeply penetrates the fabric fibres favouring a perfect softness.
- The steam has a quick and easy way to refresh the clothes. The gentle steam programmes remove odours and reduces fabric creasing. Ironing will be easier!
- The **Stain option** pre-treats stubborn stains optimizing the effectiveness of the stain remover.
- The **SensiCare System** detects the laundry load weight defining the programme duration in 30 seconds. The washing programme is tailored to the laundry load and the type of fabric without consuming more time, energy and water than necessary. Read the paragraph "The SensiCare System load detection " for more details.
- The **UltraCare technology** has been designed to protect the fabric fibres thanks to different pre-mixing phases that dissolves first the detergent and then fabric softener in the water before they are distributed in the laundry. So every fibre is reached and cared for.

3.2 Appliance overview

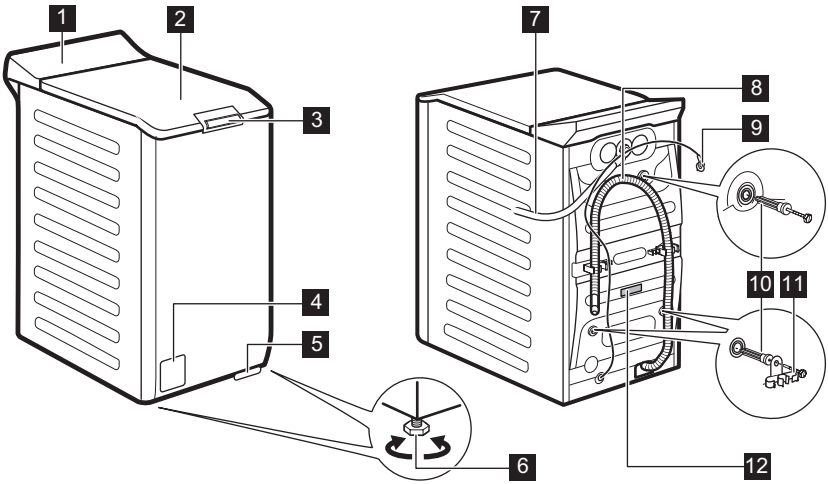

1 Control panel
2 Lid
3 Lid push handle
4 Drain pump filter
5 Lever to move the appliance
6 Feet for levelling the appliance
7 Inlet hose
8 Drain hose
9 Mains cable
10 Transit bolts
11 Hose support
12 Rating plate

Information for register product.

The rating plate reports the model name (**A**) , product number (**B**), electrical ratings (**C**) and serial number (**D**).

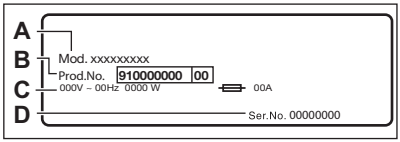

The **info label** reports the model name (**A**), product number (**B**) and serial number (**C**).

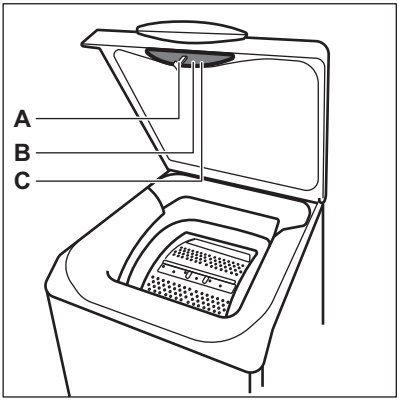

4. TECHNICAL DATA

Dimension	Width/ Height/ Total depth	39,7 cm /90,8 cm /59,9 cm
Electrical connection	Voltage Overall power Fuse Frequency	230 V 2100 W 10 A 50 Hz
Level of protection against ingress of solid particles and moisture ensured by the protective cover, except where the low voltage equipment has no protection against moisture		IPX4
Water supply pressure	Minimum Maximum	0.5 bar (0.05 MPa) 10 bar (1.0 MPa)
Water supply 1)		Cold water
Maximum Load	Cotton	6 kg
Spin Speed	Maximum spin speed	1251 rpm

1) Connect the water inlet hose to a water tap with a 3/4" thread.

5. INSTALLATION

⚠ **WARNING!**

Refer to Safety chapters.

5.1 Unpacking and positioning

1.

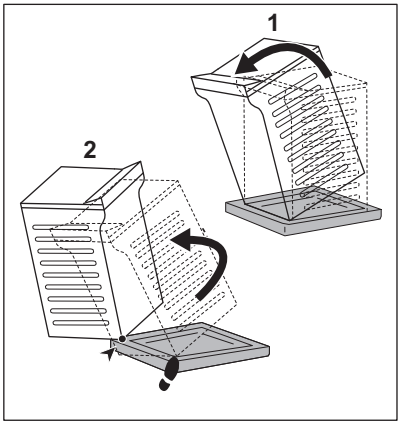

2.

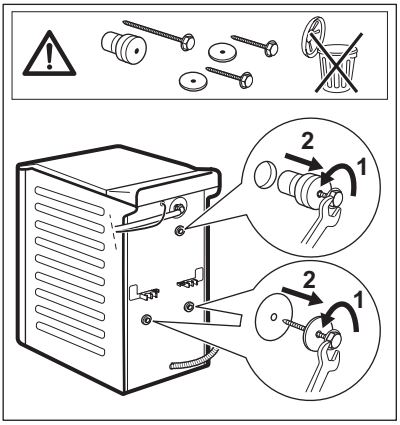

3.

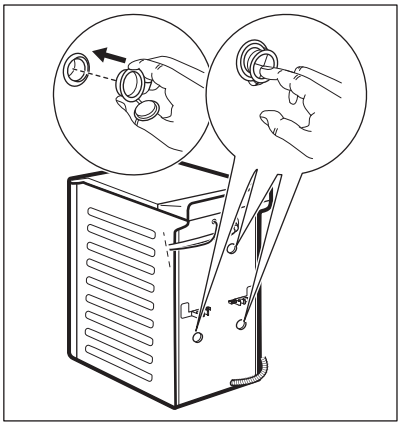

4.

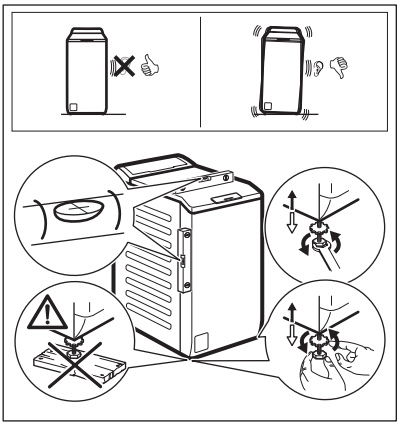

Adjust the appliance correctly to prevent vibration, noise and movement of the appliance when it operates.

⚠ **WARNING!**

Do not put cardboard, wood or equivalent materials below the appliance feet to adjust the level.

ⓘ

Make sure that carpets do not stop the air circulation below the appliance. Make sure that the appliance does not touch the wall or other units.

We recommend that you keep the packaging and the transit bolts for any transport of the appliance.

5.2 The inlet hose

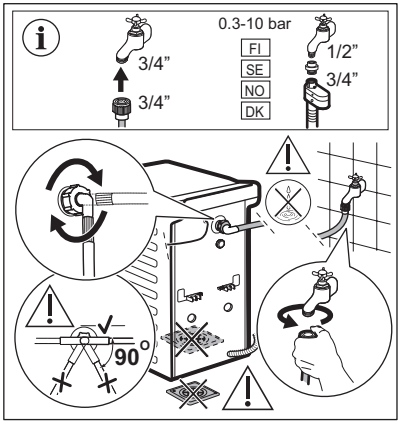

Accessories delivered with the appliance may vary depending on the model.

> Make sure there is no damage to hoses and there are no leaks from the couplings. Do not use an extension hose if the inlet hose is too short. Contact the service centre for information on inlet hose replacement.

Some model can contain inlet hose with water stop device. It prevents any leaks in the hose because of its natural ageing.
The sector in the window shows this fault. If this occurs, close the water tap and contact the authorized service centre for information to replace the hose.

Subject to change spare parts without notice. Buy accessories from authorized supplier.

5.3 Water drainage

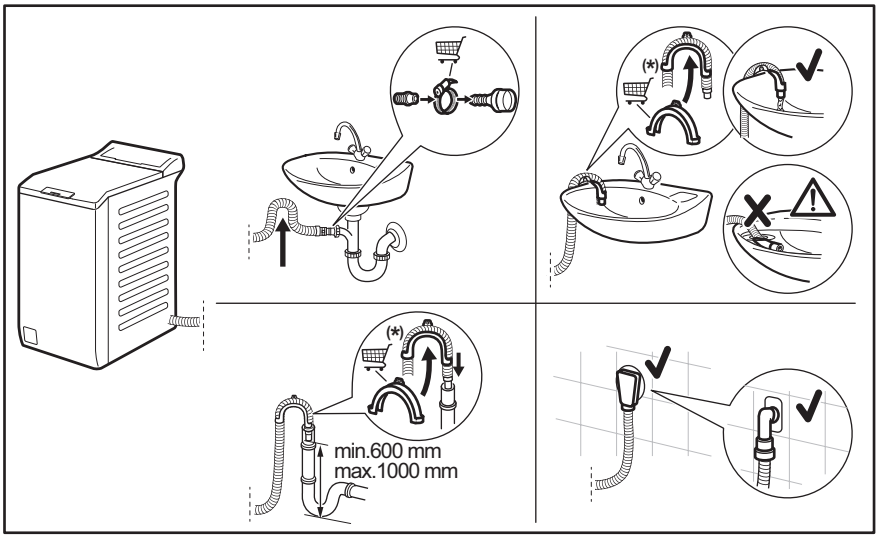

> Subject to change without notice.

The drain hose should stay at a height of no less than 600 mm and not more than 1000 mm.
You can extend the drain hose to maximum 4000 mm. Contact the authorised service centre for the other drain hose and the extension.

5.4 Electrical connection

At the end of installation you can connect the mains plug to the mains socket.

The rating plate and the 'Technical Data' chapter indicate the necessary electrical ratings. Make sure that they are compatible with the mains power supply.

Check that your domestic electrical installation can take the maximum load required, also taking into account any other appliances in use.

Connect the appliance to an earthed socket.

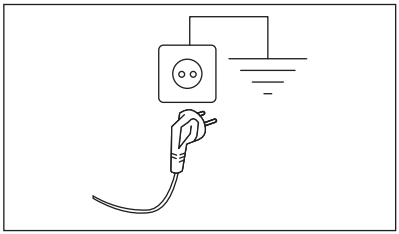

The power supply cable must be easily accessible after installing the appliance.

For any electrical work required to install this appliance, contact our Authorised Service Centre.

The manufacturer does not accept any responsibility for damage or injury through failure to comply with the above safety precaution.

6. CONTROL PANEL

6.1 Control panel description

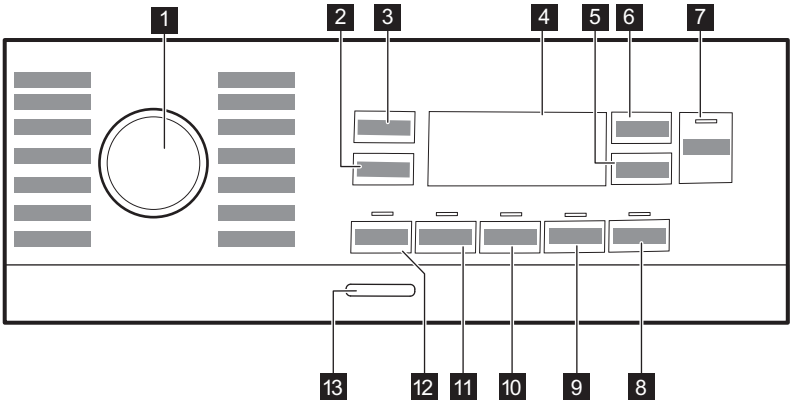

1 Programme dial

2 Spin reduction options touch button

3 Temperature touch button

4 Display

5 Delay Start touch button

6 Time Manager touch button

7 Start/Pause touch button

8 Steam Finish touch button

9 Soft Plus touch button

10 Extra Rinse touch button

11 Stain touch button

12 Prewash touch button

13 On/Off push button

6.2 Display

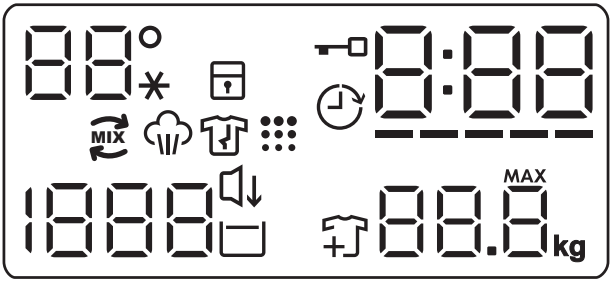

88° --*	The Temperature area: Temperature indicator Cold water indicator
	Child safety lock indicator.
	Delay start indicator.
	Lid locked indicator.
0:00	The digital indicator can show: • Programme duration (e. g. 2:40). • Delay time (e. g. 2h). • Cycle end (0:00). • Warning code (e.g. E20). • Indication of total operating hours of the appliance. Refer to the "Operating hours counter" section in the "Settings" paragraph for more details.
-----	Time Manager bars level indicator.

88.8 MAX kg	Maximum laundry weight indicator. Symbol **MAX** flashes when the laundry load exceeds the maximum declared load of the selected programme.
	Add garments indicator. Lights on during the beginning of the Wash phase, while the user can still pause the appliance and add more laundry.
	Drum clean indicator.
	Night indicator.
	Rinse Hold indicator.
1888 ---	The spin area: Spin speed indicator No Spin indicator. Spin phase is off.
MIX	UltraCare indicator.
	Steam phase indicator.
	Anti-crease phase indicator. Read the paragraph Steam Finish for more details.

6.3 Multilingual badges

Adhesive badges in different languages are supplied with the appliance.

The desired badge can be glued next to the programme dial.

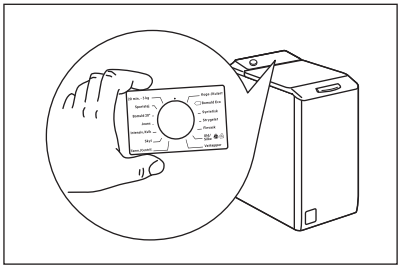

7. DIAL AND BUTTONS

7.1 Introduction

ⓘ

The options/functions are not available with all washing programmes. Check the compatibility between options/functions and washing programmes in the "Programme Chart". An option/function can exclude another one, in this case the appliance doesn't allow you to set incompatible options/functions.

7.2 On/Off

Press this button for a few seconds to activate or deactivate the appliance. Two different tunes sound while switching the appliance on or off.

As the Stand-by function automatically deactivates the appliance after several minutes to reduce the energy consumption, you may need to activate the appliance again.

For more details, refer to Stand-by paragraph in Daily Use chapter.

7.3 Temperature

When you select a washing programme, the appliance automatically proposes a default temperature.

Touch this button repeatedly until the desired temperature value appears on the display.

When the display shows the indicators _ _*, the appliance does not heat the water.

7.4 Spin

When you set a programme, the appliance automatically sets the maximum spin speed allowed, except for programme Denim. With this option you can change the default spin speed.

Touch repeatedly this button to:

- **Decrease the spin speed.** The display shows only the spin speeds available for the set programme.
- Additional spin options **No Spin – – –**. Set this option to deactivate all spin phases. The appliance performs the only draining phase of the selected washing programme. Set this option for very delicate fabrics. The rinses phase uses more water for some washing programmes
- Activate the **Rinse Hold** option. The final spin is not performed. The water of the last rinse is not drained out to prevent the fabrics from creasing. The washing programme ends with water in the drum.

  The display show the indicator . The lid stays locked and the drum turns regularly to reduce creasing. You must drain the water to unlock the lid.

  If you touch the Start/Pause button, the appliance performs the spinning phase and drains the water.

The appliance empties the water out automatically after 18 hours approximately.

- Activate the **Night** option.
  The intermediate and the final spinning phases are suppressed and the programme ends with water in the drum. This helps to reduce creasing.

  The display shows the indicator . The lid stays locked. The drum turns regularly to reduce creasing. You must drain the water to unlock the lid.
  As the programme is very quiet, it is suitable for use at night time when cheaper electricity tariffs are available. In some programmes the rinses are performed with more water.

  If you touch the Start/Pause button, the appliance performs the only draining phase.

The appliance empties the water out automatically after 18 hours approximately.

7.5 Prewash

With this option you can add a prewash phase to a washing programme.

The corresponding indicator above the touch button illuminates.

Use this option to add a pre-wash phase at 30 °C before the washing phase.

This option is recommended for heavily soiled laundry, especially if containing sand, dust, mud and other solid particles.

The option can increase the programme duration.

7.6 Stain

Touch this button to add the stain phase to a programme.

The corresponding indicator above the touch button illuminates.

Use this option for laundry with hard stains to remove.

When you set this option, put the stain remover into compartment .

The stain remover is pre-mixed and heated with detergent in order to improve its effectiveness.

This option increases the programme duration.
This option is not available with a temperature lower than 40 °C.

7.7 Permanent Extra Rinse

With this option you can add a few rinses according to the selected washing programme.

Use this option for people with allergies to detergent residues and with sensitive skin.

This option increases the programme duration.

The corresponding indicator above the touch button illuminates and also stays permanently on during next cycles until this option is deactivated.

7.8 Permanent Soft Plus

Set this option to optimise the fabric softener distribution and improve fabric softness.

Recommended when you use fabric softener.

This option increases the programme duration.

The corresponding indicator above the touch button illuminates and also stays permanently on during next cycles until this option is deactivated.

7.9 Steam Finish

Touch this button to set the steam level. This is possible only with programmes where the steam function is available. The drum

performs smooth movements for about 30 minutes. The duration of the steam phase changes accordingly to your selection. When Plus Steam option is set the programme ends up with an anticrease phase during which the drum is occasionally rotated to prevent wrinkling. The display shows 0:00 and and button Start/Pause ▷II is lit as well. At the end of the anticrease phase the drum definitely stops, the indicator goes off, the door unlocks. User at any moment can terminate the anticrease phase by:

- pressing the On/Off button for a few seconds to activate or deactivate the appliance;
- turning the selector knob to another position.

ⓘ

A small laundry load helps to reach better results.

7.10 Delay Start

With this option you can delay the start of a programme to a more convenient time.

Touch the button repeatedly to set the required delay. The time increases in steps of 1 hour up to 20 hours.

The display shows the indicator and the selected delay time. After touching the Start/Pause ▷II button, the appliance begins the countdown and the lid is locked.

7.11 Time Manager

With this option you can reduce the programme duration depending on the load size and the degree of soiling.

When you set a washing programme, the display shows the default duration and ----- dashes.

Touch Time Manager button to reduce the programme duration according to your needs. The display shows the new programme duration and a number of dashes will decrease accordingly:

---- suitable for a full load of normally soiled garments.

--- a quick cycle for a full load of lightly soiled garments.

-- very quick cycle for a smaller lightly soiled load (max. half load recommended).

- the shortest cycle to freshen up a small amount of laundry.

The Time Manager is available only with the programmes in the table.

indicator	Cottons	Synthetics
----- 1)	■	■
----	■	■
---	■	■
--	■	■
-	■	■

1) Default duration for all programmes.

Time Manager with steam programmes

When setting a steam programme, this button allows to chose three steam levels and the programme duration is reduced accordingly:

- --- : maximum.
- -- : medium.
- - : minimum.

ⓘ

In some appliances the programme duration is reduced without showing any dashes.

7.12 Start/Pause ▷II

Touch the Start/Pause ▷II button to start, pause the appliance or interrupt a running programme.

8. PROGRAMMES

8.1 Programme Chart

Programme Default temperature Temperature range	Reference spin speed Spin speed range	Maximum load	Programme description (Type of load and level of soiling)
Washing programmes			
Eco 40-60 40 °C 1)	1300 rpm (1300- 400) rpm	6 kg	**White cotton and fast-coloured cotton**. Normally soiled items. The energy consumption decreases and the time of the washing programme is extended, ensuring good washing results.
Cottons 40 °C 90 °C - Cold	1300 rpm (1300- 400 rpm)	6 kg	**White cotton and coloured cotton**. Normally, heavily and lightly soiled items.
Synthetics 40 °C 60 °C - Cold	1200 rpm (1200 - 400 rpm)	3 kg	**Synthetic items or mixed fabric items**. Normally soiled items.
Delicates 30 °C 40 °C - Cold	1200 rpm (1200- 400 rpm)	2 kg	**Delicate fabrics such as acrylics, viscose and mixed fabrics requiring gentler washing**. Normally and lightly soiled items.
Steam programmes			
Steam	-	1 kg	**Cotton, synthetics and mixed items.** Special steam cycle without washing that can be used to prepare your dried laundry for ironing or refreshing garments worn once2). This programme reduces creases and odours3) and relaxes the fibres. When the programme is completed, quickly remove the laundry from the drum. After a steam programme, ironing becomes effortless. Do not use any detergent. If necessary, remove stains by washing or using localized stain removal. Steam programmes do not perform any hygienic cycle. Do not set a Steam programme with these types of items: • Items that are not suitable for tumble drying. • Items with label "Dry clean only".

Programme Default temperature Temperature range	Reference spin speed Spin speed range	Maximum load	Programme description (Type of load and level of soiling)
Cashmere	-	1 kg	**Wool and cashmere**. Short programme to refresh maximum 1 kg of machine and hand washable woolen and cashmere garments without washing. When treating smaller loads, the programme duration can be further reduced by means of the Time Manager option. ⚠ **WARNING!** Do not use this programme with woolen garments labelled as dry-clean only.
Special programmes			
Spin/Drain	1300 rpm (1300 - 400 rpm)	6 kg	**All fabrics, except woollens and delicate fabrics**. To spin the laundry and to drain the water in the drum.
Rinse	1300 rpm (1300- 400 rpm)	6 kg	**All fabrics, except woollens and very delicate fabrics.** Programme for rinsing and spinning the laundry. The default spin speed is the one used for cotton programmes. Reduce the spin speed according to the type of laundry. If necessary, set the Extra Rinse option to add rinses. With a low spin speed, the appliance performs delicate rinses and a short spin.
Additional washing programmes			
Downing Jackets 40 °C 60 °C - Cold	800 rpm (800 - 400 rpm)	2 kg	Special programme for one **down jackets, synthetic blanket, duvet, bedspread** and so on.
Rapid 14min 30 °C	800 rpm (800- 400 rpm)	1,5 kg	**Synthetic and mixed fabric** items. Lightly soiled items and items to freshen up.

Programme Default temperature Temperature range	Reference spin speed Spin speed range	Maximum load	Programme description (Type of load and level of soiling)
Outdoor 30 °C 40 °C - Cold	1200 rpm (1200- 400 rpm)	2 kg[4)] 1 kg[5)]	Do not use fabric softener and make sure that there is no softener residue in the detergent dispenser. **Synthetic sport items.** This programme is designed to gently wash modern outdoor sportswear and is also suitable for gym, cycling or jogging clothes or similar. The recommended laundry load is 2 kg. **Waterproof, waterproof-breathable and water repellent fabrics.** This programme can also be used as a water repellency restoring cycle, specifically tailored for treating clothes with a hydrophobic coating. To perform the water repellency restoring cycle, proceed as follows: • Pour the washing detergent in the compartment . • Pour a special water repellency restorer for fabric into the softener compartment of the drawer . • Reduce the laundry load to 1 kg. To further improve the water repellency restoring action, dry the laundry in a tumble dryer by setting the Outdoor drying programme (if available and if the garment care label permits tumble drying).
Denim 30 °C 40 °C - Cold	800 rpm (1200 - 400 rpm)	2 kg	**Special programme for Denim clothing with delicate washing phase to minimize colour fading and marks**. For better care a reduced load size is recommended.
UltraWash 30 °C 60 °C - 30 °C	1300 rpm (1300 - 400 rpm)	3 kg	**Cotton items**. Intensive programme for ensuring good washing performances in a short time.

Programme Default temperature Temperature range	Reference spin speed Spin speed range	Maximum load	Programme description (Type of load and level of soiling)
Wool 40 °C 40 °C - Cold	1200 rpm (1200 - 400 rpm)	1,5 kg	**Machine washable wool, hand washable wool and other fabrics** with «hand washing» care symbol**6)**.

1) According to Commission Regulation EU 2019/2023, this programme at 40 °C is able to clean normally soiled cotton laundry declared to be washable at 40 °C or 60 °C, together in the same cycle.

For the reached temperature in the laundry, the programme duration and other data, please refer to 'Consumption Values' chapter.
The most efficient programmes in terms of energy consumption are generally those that perform at lower temperatures and longer duration.

2) If you set a Steam programme with dried laundry, at the end of the cycle the laundry can be humid. Line dry the items for about 10 minutes.
3) Steam programme doesn't remove particularly intense odour.
4) Washing programme.
5) Washing programme and waterproofing phase.
6) During this cycle the drum rotates slowly to ensure a gentle wash. It can seem that the drum doesn't rotate or doesn't rotate properly, but this is normal for this programme.

Programme options compatibility

Programme	OPTIONS Spin				Prewash 1)	Stain 2)	Extra Rinse	Soft Plus	Steam Finish 2)	Delay Start	Time Manager
Eco 40-60	■		■							■	
Cottons	■	■	■	■	■	■	■	■	■	■	■
Synthetics	■	■	■	■	■	■	■	■	■	■	■
Delicates	■	■	■	■			■	■		■	
Steam										■	■
Cashmere										■	■
Spin/Drain	■	■3)								■	

Programme	OPTIONS Spin				Prewash 1)	Stain 2)	Extra Rinse	Soft Plus	Steam Finish 2)	Delay Start	Time Manager
Rinse	■	■	■				■			■	
Downing Jackets	■	■								■	
Rapid 14min	■	■	■							■	
Outdoor	■	■	■				■			■	
Denim	■	■	■	■		■	■	■	■	■	
UltraWash	■	■	■				■	■		■	
Wool	■	■	■							■	

1) Prewash and Stain cannot be selected together.
2) This option is not available with temperature lower than 40 °C.
3) If you set the No Spin option, the appliance performs draining only.

Suitable detergents for washing programmes

Programme	Universal powder 1)	Liquid Universal	Liquid for coloureds	Delicates woollens	Special
Eco 40-60	▲	▲	▲	--	--
Cottons	▲	▲	▲	--	--
Synthetics	▲	▲	▲	--	--
Delicates	--	--	--	▲	▲
Downing Jackets	--	▲	▲	--	▲
Rapid 14min	--	▲	▲	--	--
Outdoor	--	--	--	▲	▲
Denim	--	--	▲	▲	▲
UltraWash	▲	▲	▲	--	--
Wool	--	--	--	▲	▲

1) At temperature higher than 60 °C the use of powder detergent is recommended.

▲ = Recommended

-- = Not recommended

8.2 Woolmark Premium Wool Care - Green

The wool wash cycle of this machine has been tested and approved by The Woolmark Company for the washing of wool garments labelled as «hand wash» provided that the products are washed according to the instructions on the garment label and those issued by the manufacturer of this washing machine. M 1734

9. SETTINGS

9.1 Acoustic signals

This appliance has different acoustic signals, that operate when:

- You activate the appliance (special short tune).
- You deactivate the appliance (special short tune).
- You touch the buttons (click sound).
- You make an invalid selection (3 short sounds).
- The programme is completed (sequence of sounds for about 1 minute).
- The appliance has a malfunction (sequence of short sounds for about 5 minutes).

To **deactivate/activate** the acoustic signals set a one of the programme, touch the and the buttons simultaneously for about 2 seconds. The display shows On/Off

If you deactivate the acoustic signals, they continue to operate when the appliance has a malfunction.

9.2 Child Lock

With this option you can prevent children from playing with the control panel.

To **activate/deactivate** this option, hold down the button until **comes on/goes off** on the display.

The appliance will default to this option after you switch it off.

The Child Lock function may not be available for a few seconds after switching the appliance on.

9.3 Operating Hours Counter

It is possible to visualise the total operating time of the appliance in hours, starting from the first switching on. This value will count operating time of the cycles (does not include pauses, delayed start time). To visualise this value, proceed as follows:

1. Switch the appliance on by pressing On/Off button.
2. Turn the programme knob to the Eco 40-60 programme (1st position clockwise).
3. Press and hold the and buttons for some seconds (within 10 seconds after the switching on. After these 10 seconds, the key combination activates and deactivates the acoustic signals).
4. After 3 seconds the total hours operated by the appliance are shown in the display: e.g. 1276 hours, the display shows the text Hr for 2 seconds, 12 (thousands and hundreds) for 2 seconds and 76 (tens and units).

ⓘ

If the procedure does not work (due to timeout, wrong programme dial position or wrong keys combination), switch the appliance off and repeat sequence from the beginning.

9.4 Factory Reset

This function allows to restore the factory default options. To **activate** this option follow steps below:

1. Switch the appliance on by pressing On/Off button.
2. Turn the programme knob to the Synthetics programme (3rd position clockwise).
3. Press and hold the [I] and [T] buttons for some seconds (within 10 seconds after the switching on. After these 10 seconds, the key combination activates and deactivates the acoustic signals).
4. The display will show **– – –** for about 5 seconds.

ⓘ

If the procedure does not work (due to timeout, wrong programme dial position or wrong keys combination), switch the appliance off and repeat sequence from the beginning.

10. BEFORE FIRST USE

1. Make sure that the electrical power is available and the water tap is open.
2. Pour 2 litres of water into the detergent compartment marked by [II].

This action activates the drain system.

3. Pour a small quantity of detergent into the compartment marked by [II].
4. Set and start a programme for cotton at the highest temperature without any laundry in the drum.

This removes all possible dirt from the drum and the tub.

11. DAILY USE

⚠ **WARNING!**

Refer to Safety chapters.

11.1 Activating the appliance

1. Connect the mains plug to the mains socket.
2. Open the water tap.
3. Press button On/Off to activate the appliance.

A short tune sounds.

11.2 Loading the laundry

1. Open the appliance lid.
2. Push the button **A**.

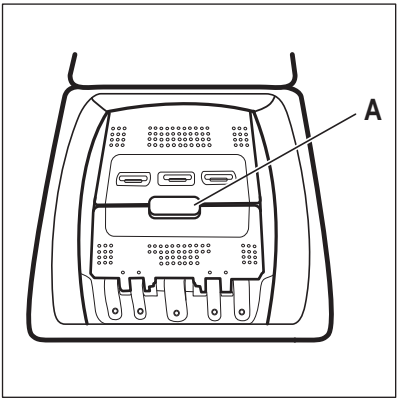

The drum opens automatically.

3. Put the laundry in the drum, one item at a time.

4. Shake the items before you put them in the appliance.
5. Close the drum and the lid.

CAUTION!

- Make sure not to put too much laundry in the drum.
- Make sure that no laundry stays between the seal and the appliance and that you close the drum correctly.
- Washing heavily oiled, greasy stains or using fragrances perfume could cause damage rubber parts of the appliance.

11.3 Detergent compartments. Using detergent and additives

1. Measure out specified detergents and the fabric conditioner.
2. Put the detergent and the fabric conditioner into the proper compartments.

Always obey the instructions that you find on the packaging of the detergent products.

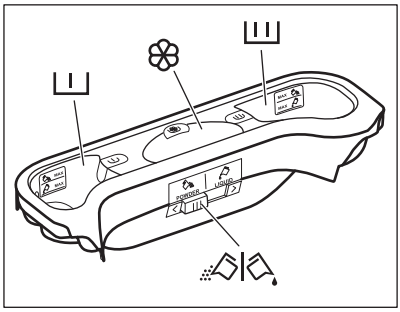

I	Detergent compartment for prewash phase. The marks MAX are the maximum levels of the quantity of detergent (powder or liquid). When you set a programme with a stain, add detergent (powder or liquid).
II	Detergent compartment for washing phase. The marks MAX are the maximum levels of the quantity of detergent (powder or liquid).
	Compartment for liquid additives (fabric conditioner, starch). The mark M is the maximum level for the quantity liquid additives.
	Flap for powder or liquid detergent.

11.4 Liquid or powder detergent

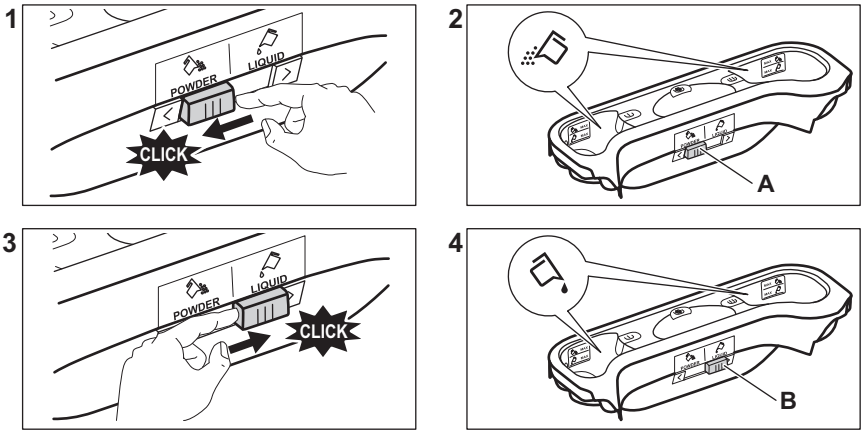

- Position **A** for powder detergent (factory setting).
- Position **B** for liquid detergent.

ⓘ

When you use the liquid detergent:
- Do not use gelatinous or thick liquid detergents.
- Do not put more liquid then the maximum level.
- Do not set the delay start function.

11.5 Setting a programme

1. Turn the programme dial to select the desired washing programme.

The indicator of the Start/Pause button flashes.
The display shows an indicative programme duration.

2. To change the temperature and/or the spin speed, touch the related buttons.
3. If desired, set one or more options by touching the related buttons. The related indicators illuminate on the display and the given information changes accordingly.

ⓘ

If a selection is **not possible** an acoustic signal sounds.

11.6 Starting a programme

Touch the Start/Pause button to start the programme. It is not possible to start the programme when the indicator of the button is off and doesn't flash (e.g. programme dial on a wrong position).
The related indicator stops flashing and stays on.
The programme starts, the lid is locked. The display shows the indicator .

ⓘ

The drain pump can operate shortly before the appliance fills water.

11.7 Starting a programme with the delay start

1. Touch the Delay Start button repeatedly until the display shows the desired delay time. On the display the indicator shows .

2. Touch the Start/Pause button. The appliance lid locks and starts the countdown of the delay start. The display shows the indicator .
When the countdown is completed, the programme starts automatically.

Cancelling the delay start after the countdown has started

To cancel the delay start:

1. Touch the Start/Pause button to pause the appliance. The related indicator flashes.
2. Touch the Delay Start button repeatedly until the display shows and the indicator goes off.
3. Touch the Start/Pause button again to start the programme immediately.

Changing the delay start after the countdown has started

To change the delay start:

1. Touch the Start/Pause button to pause the appliance. The related indicator flashes.
2. Touch the Delay Start button repeatedly until the display shows the desired delay time.
3. Touch the Start/Pause button again to start the new countdown.

11.8 The SensiCare System load detection

> The programme duration in the display is referred to a **medium/high load**.

After touching the Start/Pause button, the maximum declared load indicator goes off, the SensiCare System starts the laundry load detection:

1. The appliance detects the load in the first 30 seconds. In the programmes where Time Manager is available, during this phase the Time Manager bars ---- placed below the time digits play a simple animation. The drum rotates shortly.
2. The programme duration could be adjusted accordingly and could increase or decrease. After further 30 seconds, the water filling starts.

At the end of the load detection, **in case of drum overload**, the indicator MAX is flashing in the display:

In this case, for 30 seconds, it is possible to pause the appliance and remove the exceeding garments.

Once removed the exceeding garments, touch the Start/Pause button to start the programme again. The SensiCare phase can be repeated up to three times (see point 1).

Important! If the laundry amount will not be reduced, the washing programme starts anyway, despite the overload. In this case, it will be not possible to guarantee the best washing results.

> About 20 minutes after the programme start, the programme duration could be adjusted again depending on the capacity of water absorption of the fabrics.

> The SensiCare detection is carried out with complete washing programmes only and if the programme duration has not been reduced by means of the Time Manager button.

> The SensiCare System is not available with all programmes such as :Wool, Rinse and programmes with short cycles.

11.9 Interrupting a programme and changing the options

When the programme is running, you can change **only some** options:

1. Touch the Start/Pause button.

The related indicator flashes.

2. Change the options. The given information in the display changes accordingly.
3. Touch the button Start/Pause again.

The washing programme continues.

11.10 Cancelling a running programme

1. Press the button On/Off to cancel the programme and to deactivate the appliance.
2. Press the button On/Off again to activate the appliance.

> ⓘ
>
> If the SensiCare System has completed and the water filling has already started, the new programme starts **without repeating the SensiCare System**. The water and the detergent are not drained out in order to avoid waste. The display shows the maximum duration of the programme, updating it about 20 minutes after the starting of the new programme.

There is also an alternative way of cancelling:
1. Rotate the selector knob to the "Reset" position • .
2. Wait for 1 second. The display shows ––– .

Now, you can set a new washing programme.

11.11 Opening the lid - Adding garments

> ⓘ
>
> If the temperature and level of the water in the drum are too high and/or the drum is still rotating you should not open the lid.

While a programme or the delay start operates, the appliance lid is locked. The display shows the indicator 🔒.

1. Touch the Start/Pause ▷II button.

In the display the related lid lock indicator goes off.

2. Open the appliance lid and drum doors. If necessary, add or remove the items. Close the drum door and lid. Touch the Start/Pause ▷II button.

The programme or the delay start continues.

11.12 End of the programme

When the programme has finished, the appliance stops automatically. The acoustic signals operate (if they are active). The display shows 0:00

The indicator of the Start/Pause ▷II button goes off.

The lid unlocks and the indicator 🔒 goes off.

1. Press button On/Off to deactivate the appliance.

After five minutes from the end of the programme, the energy saving function automatically deactivates the appliance.

> ⓘ
>
> When you activate the appliance again, the display shows the end of the previous programme. Turn the programme dial to set a new cycle.

2. Remove the laundry from the appliance.
3. Make sure that the drum is empty.
4. Keep the lid and the drum door ajar to prevent mildew and odours.
5. Close the water tap.

11.13 Draining water out after end of cycle

If you have chosen a programme or an option that does not empty out the water of the last rinse, the programme is completed, but:

- The time area shows 0:00 and the display shows the lid locked 🔒.
- The drum still turns at regular intervals to prevent creases in the laundry.
- The lid stays locked.
- You must drain the water to open the lid:

1. If necessary, touch the Spin button to decrease the spin speed proposed by the appliance.
2. Press the Start/Pause ▷II button:
   - If you have set Rinse Hold the appliance drains the water and spins.
   - If you have set Night the appliance only drains the water

The option indicator Rinse Hold and Night disappears.

3. When the programme is completed and the lid locked indicator goes off, you can open the lid.
4. Press the On/Off button for a few seconds to deactivate the appliance.

11.14 Stand-by option

The Stand-by function automatically deactivates the appliance to reduce the energy consumption when:

- You do not use the appliance for 5 minutes when no programme is running. Press the button On/Off to activate the appliance again.
- 5 minutes after the end of the washing programme. Press the On/Off button to activate the appliance again. The display shows the end of the last programme. Turn the programme dial to set a new cycle.

If the dial is rotated to the "Reset" position •, the appliance automatically turns off in 30 seconds.

> ⓘ
> If you set a programme or an option that ends with water in the drum, the Stand-by function **doesn't deactivate** the appliance to remind you to drain the water.

12. HINTS AND TIPS

> ⚠ **WARNING!**
> Refer to Safety chapters.

12.1 The laundry load

- Divide the laundry into: white, coloured, synthetics, delicates and wool.
- Follow the washing instructions on the laundry care labels.
- Do not wash white and coloured items together.
- Some coloured items can discolour with the first wash. We recommend that you wash them separately for the first couple of times.
- Turn multilayered fabrics, wool and items with printed illustrations inside out.
- Pre-treat stubborn stains.
- Wash stubborn stains with a special detergent.
- Be careful with curtains. Remove the hooks and put the curtains in a washing bag or pillowcase.
- A very small load can cause balance problems with the spin phase leading to excessive vibration. If this occurs:
  a. interrupt the programme and open the door (refer to "Daily Use" chapter);
  b. manually redistribute the load so that the items are spaced evenly around the tub;
  c. press the Start/Pause button. The spin phase continues.
- Button up pillowcases, close zippers, hooks and poppers. Tie up belts, cords, shoelaces, ribbons and any other loose elements.
- Do not wash laundry without hems or with cuts. Use a washing bag to wash small and/or delicate items (e.g. underwired bras, belts, tights, shoelaces, ribbons, etc.).

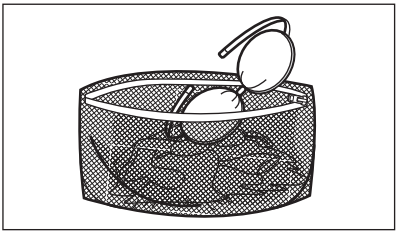

- Empty pockets and unfold the items.

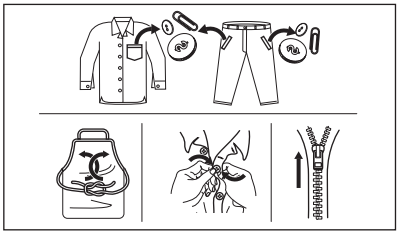

12.2 Stubborn stains

For some stains, water and detergent is not sufficient.

We recommend that you pre-treat these stains before you put the items in the appliance.

Special stain removers are available. Use the special stain remover that is applicable to the type of stain and fabric.

12.3 Detergent type and quantity

The choice of detergent and use of correct quantities not only affects your wash performance, but also helps to avoid waste and protect the environment:

- Use only detergents and other treatments specially made for washing machines. First, follow these generic rules:
  - powder detergents for all types of fabric, excluding delicate. Prefer powder detergents containing bleach for whites and laundry sanitization,
  - liquid detergents, preferably for low temperature wash programmes (60 °C max) for all types of fabric, or special ones for woollens only.
- The choice and quantity of detergent will depend on: type of fabric (delicates, woollens, cottons, etc), the colour of clothes, size of the load, degree of soiling, wash temperature and hardness of the water used.
- Follow the instructions that you find on packaging of the detergents or other treatments without exceeding the indicated maximum level (**MAX**).
- Do not mix different types of detergents.
- Use less detergent if:
  - you are washing a small load,
  - the laundry is lightly soiled,
  - there is large amounts of foam during washing.
- When using detergent tabs or pods, always put them inside the drum, not in the detergent dispenser.

Insufficient detergent may cause:
- unsatisfactory washing results,
- the wash load to turn grey,
- greasy clothes,
- mould in the appliance.

Excessive detergent may cause:
- sudsing,
- reduced washing effect,
- inadequate rinsing,
- a greater impact for the environment.

12.4 Savings tips

To save water, energy and to help protect the environment, we recommend that you follow these tips:

- **Normally soiled laundry** may be washed **without prewash** in order to save detergent, water and time (the environment is protected too!).
- Loading the appliance to the **maximum capacity indicated for each programmes helps to reduce energy and water consumption**.
- With adequate pre-treatment, stains and limited soiling can be removed; the laundry can then be washed at a lower temperature.
- To use the correct quantity of detergent, refer to the quantity suggested by the detergent producer and check the water hardness of your domestic system. Refer to "Water hardness".
- Set the **maximum possible spin speed** for the selected washing programme **before drying your laundry in a tumble dryer**. This will save energy during drying!
- Preferably, use short cycles at lower temperatures.

12.5 Water hardness

If the water in your area is hard or medium hard, we recommend that you use a water softener for washing machines.

The water is hard or medium hard when the hardness exceeds 8dH.

In areas where the water is soft it is not necessary to use a water softener.

To find out the water hardness in your area, contact your local water authority.

Use the correct quantity of water softener. Follow the instructions that you find on the packaging of the product.

13. CARE AND CLEANING

⚠ **WARNING!**

Refer to Safety chapters.

13.1 Periodic cleaning schedule

Periodic cleaning helps to extend the life of your appliance.

After each cycle, keep the lid and the drum door ajar to get air circulation and dry the humidity inside the appliance: this will prevent mildew and odours.

If the appliance is not used for a long time: close the water tap and unplug the appliance.

Indicative periodic cleaning schedule:

Descaling	Twice a year
Maintenance wash	Once a month
Clean lid seal	Every two months
Clean drum	Every two months
Clean detergent dispenser	Every two months
Clean drain pump filter	Twice a year
Clean the inlet hose and the valve filter	Twice a year

The following paragraphs explain how you should clean each part.

13.2 Removing foreign objects

ⓘ

Make sure that pockets are empty and all loose elements are tied up before running your cycle. Refer to "The laundry load" in "Hints and tips".

Remove any foreign objects (such as metal clip, buttons, coins, etc) that you may find in the filters and the drum. Refer to "Cleaning the drum", "Cleaning the drain pump" and "Cleaning the inlet hose and the valve filter" paragraphs. If necessary, please contact the Authorised Service Centre.

13.3 External cleaning

Clean the appliance with mild soap and warm water only. Fully dry all the surfaces. Do not use a scouring pads or any scratching material.

⚠ **CAUTION!**

Do not use alcohol, solvents or chemical products.

⚠ **CAUTION!**

Do not clean the metal surfaces with chlorine-based detergent.

13.4 Descaling

ⓘ

If the water in your area is hard or medium hard, we recommend that you use a water softener for washing machines.
The water is hard or medium hard when the hardness exceeds 8dH.

Regularly examine the drum to check for limescale.

Regular detergents already contain water softening agents, but we recommend to run a cycle with an empty drum and a descaling product.

ⓘ

Always follow the instructions that you find on the packaging of the product.

13.5 Maintenance wash

The repeated and prolonged use of low temperature programmes can cause detergent deposits, fluff residues, bacterial growth inside the drum and the tub. This could generate bad odours and mildew. To eliminate these deposits and clean the inner part of the appliance, run a maintenance wash regularly (at least once a month).

ⓘ

Refer to "Cleaning the drum" paragraph.

13.6 Cleaning the drum

Regularly examine the drum to prevent unwanted deposits.

Rust deposits in the drum may occur due to rusting foreign body in the washing or tap water containing iron

Clean the drum with special products for stainless steel.

ⓘ

Always follow the instructions that you find on the packaging of the product.
Do not clean the drum with acidic descaling products, scouring products containing chlorine or iron or steel wool.

For a thorough clean:

1. Remove all laundry from the drum.
2. Run a Cottons programme with the highest temperature.
3. Add a small quantity of powder detergent into the empty drum, in order to rinse out any left residues.

ⓘ

Occasionally, at the end of a cycle the display may show the icon ⁞⁞⁞⁞: this is a recommendation to perform the “drum cleaning”. Once the drum cleaning has been performed, the icon disappears.

13.7 Lid seal

Regularly examine the seal and remove all objects from the inner part. Clean it when needed, using ammonia cream cleanser agent without scratching the seal surface.

ⓘ

Always obey the instructions that you find on the packaging of the product.

13.8 Cleaning the detergent dispenser

To prevent possible deposits of dried detergent or clotted fabric softener and/or formation of mould in the detergent dispenser, every two months carry out the following cleaning procedure how explained in the following diagrams:

1
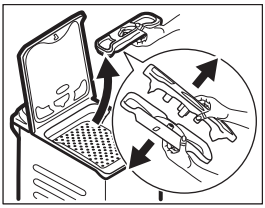

2
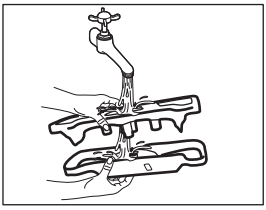

3
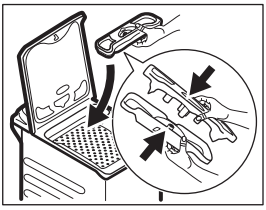

13.9 Cleaning the drain pomp filter

Regularly check the drain pump filter and make sure that it is clean.

- Disconnect the mains plug from the mains socket.
- Do not clean the pump if the water in the appliance is hot. Wait until the water cools down .
- Do not remove the filter while the appliance operates.
- Unscrew the filter slowly and gently until the water stops flowing out. After water has been drained, filter can be unscrewed fully.

Clean the drain pump if:

- The appliance does not drain the water.
- The drum does not turn.
- The appliance makes an unusual noise because of the blockage of the drain pump.
- The display shows the alarm code E20

Proceed as described in following diagrams to clean the pump filter:

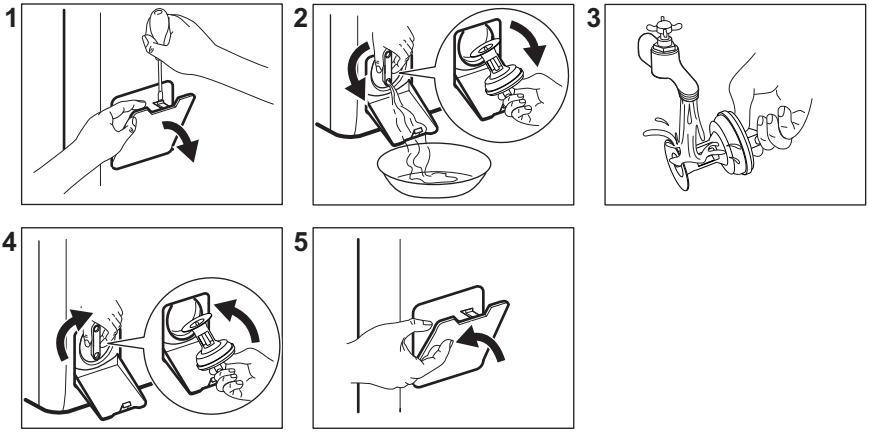

Always keep a rag nearby to dry up any water spillages when removing the filter.

13.10 Cleaning the inlet hose and the valve filter

It is recommended to clean both the filters of the inlet hose and valve twice a year to remove any deposit, collected over the time. Proceed as described in following diagrams to clean filters:

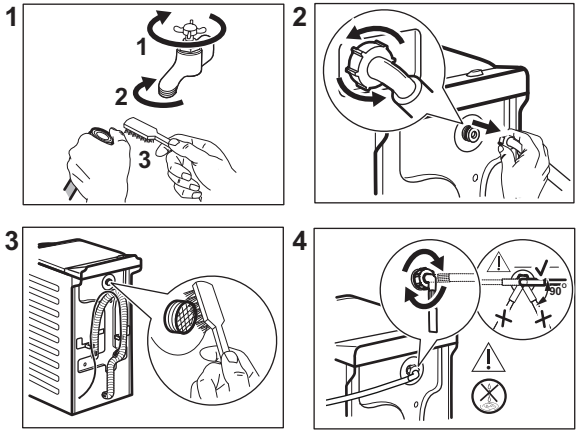

13.11 Emergency drain

If the appliance cannot drain the water, carry out the same procedure, described in 'Cleaning the drain pump' paragraph. If necessary, clean the pump.

When you drain the water with the emergency drain procedure, you must activate the drain system again:

1. Put 2 litres of water in the main wash compartment of the detergent dispenser.
2. Start the programme to drain the water.

13.12 Frost precautions

If the appliance is installed in an area where the temperature can reach values around 0° C or drop below, remove the remaining water from the inlet hose and the drain pump.

1. Disconnect the mains plug from the mains socket.
2. Close the water tap.
3. Put the two ends of the inlet hose in a container and let the water flow out of the hose.
4. Empty the drain pump. Refer to the emergency drain procedure.
5. When the drain pump is empty, install the inlet hose again.

⚠ **WARNING!**

Make sure that the temperature is higher than 0 °C before you use the appliance again.
The manufacturer is not responsible for damages caused by low temperatures.

14. TROUBLESHOOTING

⚠ **WARNING!**

Refer to Safety chapters.

14.1 Alarm Codes and Potential failures

The appliance does not start or it stops during operation. First try to find a solution to the problem (refer to the tables).

⚠ **WARNING!**

Deactivate the appliance before carrying out any check.

With some problems, the display shows an alarm code and the Start/Pause ▷II **button may flash continuously:**

Alarm Codes	Possible solution
E 10 The appliance does not fill with water properly.	• Make sure that the water tap is open. • Make sure that the pressure of the water supply is not too low. For this information, contact your local water authority. • Make sure that the water tap is not clogged. • Make sure that the inlet hose has no kinks, damages or bends. • Make sure that the connection of the water inlet hose is correct. • Make sure that the filter of the inlet hose and the filter of the valve are not clogged. Refer to 'Care and cleaning'.

E20 The appliance does not drain the water.	• Make sure that the sink spigot is not clogged. • Make sure that the drain hose has no kinks or bends. • Make sure that the drain filter is not clogged. Clean the filter, if necessary. Refer to "Care and cleaning". • Make sure that the connection of the drain hose is correct. • Set the drain programme if you set a programme without drain phase. • Set the drain programme if you set an option which ends with water in the tub.
E40 The appliance lid is open or not closed correctly.	• Make sure that the lid is properly closed.
E91 No communication between electronic elements of the appliance.	• The programme was not finished properly or the appliance stopped too early. Switch the appliance off and on again. • If the alarm code appears again, contact the Authorised Service Centre.
EA0 The appliance drum doors are open or not closed correctly.	• Make sure that drum doors are properly closed.
EH0 The mains supply is unstable.	• Wait until mains supply is stable.
EF0 The anti-flood device is on.	• Disconnect the appliance and close the water tap. Contact the Authorised Service Centre.

If the display shows other alarm codes, deactivate and activate the appliance. If the problem continues, contact the Authorised Service Centre.
In case of different problem with the washing machine check the table below for possible solutions.
Some alarm codes may not occur. Subject to change without notice.

Potential failures	Possible solution
The programme does not start.	• Make sure that the mains plug is connected to the mains socket. • Make sure that the appliance lid and drum door are closed. • Make sure that there is no damaged fuse in the fuse box. • Make sure that the Start/Pause ▷II has been touched. • If the delay start is set, cancel the setting or wait for the end of countdown. • Deactivate the Child Lock function if it is on. • Check the position of the knob on the selected programme.
The appliance fills with water and drains immediately.	• Make sure that the drain hose is in the correct position. The hose may be positioned too low. Refer to "Installation instruction".
The spin phase does not operate or the washing cycle lasts longer than usual.	• Set the spin programme. • Make sure that the drain filter is not clogged. Clean the filter, if necessary. Refer to "Care and cleaning". • Adjust manually the items in the tub and start the spin phase again. This problem may be caused by balance problems.

Potential failures	Possible solution
There is water on the floor.	• Make sure that the couplings of the water hoses are tight and there is not water leakages. • Make sure that the water inlet hose and the drain hose have no damages. • Make sure you use the correct detergent and the correct quantity of it.
You cannot open the appliance lid.	• Make sure that a washing programme that ends with water in tub, has not been selected. • Make sure that the washing programme is finished. • Set the drain or the spin programme if there is water in the drum. • Make sure that the appliance receives electrical power. • This problem may be caused by a failure of the appliance. Contact the Authorised Service Centre.
The appliance makes an unusual noise and vibrates.	• Make sure the levelling of the appliance is correct. Refer to "Installation instruction". • Make sure that the packaging and/or the transit bolts are removed. Refer to "Installation instruction". • Add more laundry in the drum. The load may be too small.
The programme duration increases or decreases during programme execution.	• The SensiCare System is able to adjust the programme duration according to the type and the laundry load size. Refer to "The SensiCare System load detection" in "Daily Use" chapter.
The washing results are not satisfactory.	• Increase the detergent quantity or use a different detergent. • Use special products to remove the stubborn stains before you wash the laundry. • Make sure that you set the correct temperature. • Decrease the laundry load.
Too much foam in the drum during the washing cycle.	• Reduce the quantity of detergent.
After the washing cycle, there are some detergent residues in the dispenser drawer.	• Make sure that the flap is in the correct position. • Make sure you have used the detergent dispenser according the indications given in this user manual.

After the check, activate the appliance. The programme continues from the point of interruption.
If the problem occurs again, contact the Authorised Service Centre.
The necessary data for the service centre are on the rating plate.

15. CONSUMPTION VALUES

15.1 Comment

ⓘ

The QR code on the energy label supplied with the appliance provides a web link to the information related to the performance of the appliance in the EU EPREL database. Keep the energy label for reference together with the user manual and all other documents provided with this appliance.
It is also possible to find the same information in EPREL using the link **https://eprel.ec.europa.eu** and the model name and product number that you find on the rating plate of the appliance. Refer to 'Product description' chapter for the position of the rating plate.

ⓘ

Values and programme duration may differ depending on different conditions (e.g. room temperature, water temperature and pressure, load size and type of laundry, supply voltage) and also if you change the default setting of a programme.

15.2 According to Commission Regulation Eu 2019/2023

Eco 40-60 programme	kg	kWh	Litres	hh:mm	%	°C	rpm 1)
Full load	6	0.670	50	3:17	53.00	38	1251
Half load	3	0.270	40	2:35	53.00	27	1251
Quarter load	1,5	0.140	35	2:30	55.00	23	1251

1) Maximum spin speed.

Power consumption in different modes

Off (W)	Stand-by (W)	Delay start (W)
0.50	0.50	4.00
Time to Off/Standby mode is 15 minutes maximum.		

15.3 Common programmes

Programme	kg	kWh	Litres	hh:mm	%	°C	rpm
Cottons 1) 90°C	6	2.35	85	4:05	53.00	85	1300
Cottons 60°C	6	1.70	80	3:45	53.00	55	1300

Programme	kg	kWh	Litres	hh:mm	%	°C	rpm
Cottons 2) 20°C	6	0.25	80	2:45	53.00	20	1300
Synthetics 40°C	3	0.55	55	2:15	35.00	40	1200
Delicates 3) 30°C	2	0.30	50	1:00	35.00	30	1200
Wool 30°C	1,5	0.20	45	1:05	30.00	30	1200

1) Suitable for washing heavily soiled textiles.

2) Suitable for washing lightly soiled cottons, synthetic and mixed fabrics.

3) It also performs as quick washing cycle for lightly soiled laundry.

16. QUICK GUIDE

16.1 Daily use

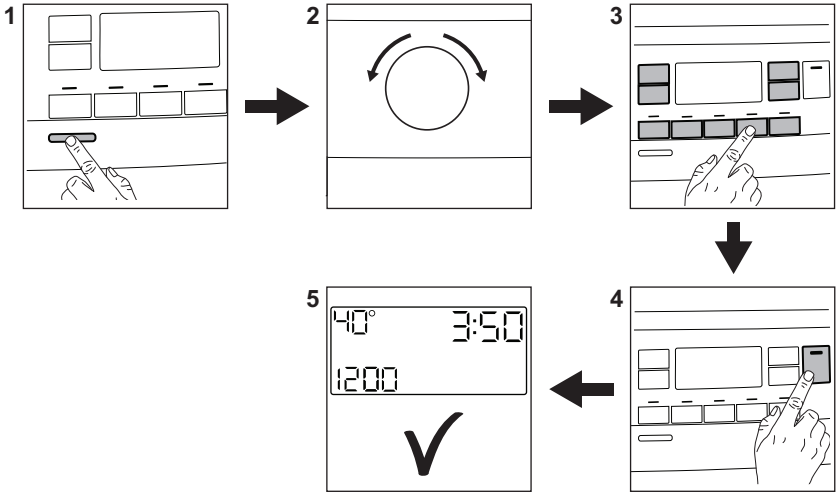

Connect the mains plug to the mains socket.

Open the water tap.

Load the laundry.

Pour the detergent and other treatment in the proper compartment of the detergent dispenser.

1. Push the **On/Off** button to switch the appliance on.
2. Turn the programme dial to set the desired programme.
3. Set the desired options by means of the corresponding touch buttons.
4. To start the programme, touch the **Start/ Pause** ▷‖ button.
5. The appliance starts.

At the end of the programme, remove the laundry.

Push the **On/Off** button to switch the appliance off.

16.2 Cleaning the drain pump filter

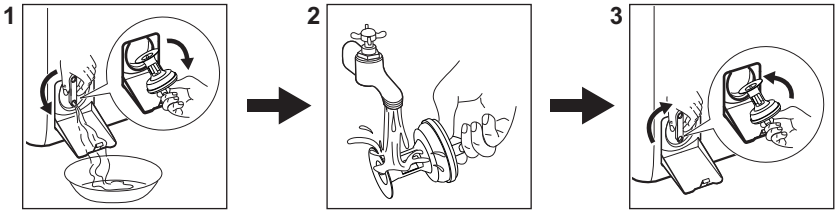

Clean the filter regularly and, especially, if the alarm code E20 appears on the display.

16.3 Programmes

Programmes	Load	Product description
Eco 40-60	6 kg	White and coloured cottons. Normally soiled garments.
Cottons	6 kg	White cotton and coloured cotton.
Synthetics	3 kg	Synthetic items or mixed fabric items.
Delicates	2 kg	Delicate fabrics such as acrylics, viscose, polyester items.
Steam	1 kg	Steam programme for wool and cashmere.
Cashmere	1 kg	Steam programme for cotton, synthetic and delicate garments.
Spin/Drain	6 kg	All fabrics, except woollens and very delicate fabrics. Programme for spinning and draining the water.
Rinse	6 kg	All fabrics, except woollens and very delicate fabrics. Programme for rinsing and spinning.
Downing Jackets	2 kg	Single synthetic blanket, padded clothes, duvets, down jackets.
Rapid 14min	1,5 kg	Cotton and synthetic lightly soiled items or once worn items.
Outdoor	2 kg 1) 1 kg 2)	Modern outdoor sporting garments.

Programmes	Load	Product description
Denim	2 kg	Denim clothing.
UltraWash	3 kg	Cotton items. Intensive short programme.
Wool	1,5 kg	Machine washable wool, hand washable wool and delicates.

1) Washing programme.
2) Washing programme and waterproofing phase.

17. ENVIRONMENTAL CONCERNS

Recycle materials with the symbol ♲. Put the packaging in relevant containers to recycle it. Help protect the environment and human health by recycling waste of electrical and electronic appliances. Do not dispose of appliances marked with the symbol with the household waste. Return the product to your local recycling facility or contact your municipal office.

electrolux.com

135963272-A-422024