Product technical sheet

WOODEN WD1504

3 - 14 years | 29 kids | 43,4 m²

Material specification

- Construction made of the highest quality laminated, impregnated and double coated pine wood 90 x 90 mm without knots, secured from the top with polypropylene plugs,
- Metal anchors made of hot dip galvanized steel, protecting the wood from direct contact with the ground to prevent rot and to extend the product's life,
- Platforms and steps made of durable anti-slip and waterproof plywood or HPL plate,
- Structure for platforms made of hot-dip galvanized and powder coated steel;
- Roofs, side panels made of durable HDPE or HPL plate, resistant to weather conditions,
- Slides made of stainless steel with durable HDPE or HPL side panels,
- Educational paneles and moving elements made of HDPE or HPL plate, resistant to weather conditions,
- Windows and/or elements made of polycarbonate,
- Maze windows made of polycarbonate, balls made of synthetic material,
- Flowers made of durable HDPE or HPL plate, resistant to weather conditions; underground installation made of synthetic material connects 2 stainless steel profiles allowing the communication,
- Stainless steel bars and handrails,
- Screws covered with plastic caps and/or stainless steel screws,
- Safe end caps made of polypropylene,

Facilitating disability

- easy access
- shelters
- integration

Intellectual development

- manipulation
- music
- sight
- thinking

Physical development

- sliding

Vinci Group Sp. z o.o.
Seminaryjna 9 Street
99-400 Łowicz

VAT: 534-250-14-46
PHONE: +48 42 203 24 99 ext. 26
M: +48 793 404 991

biuro@vinci-play.com
info@vinci-play.com
www.vinci-play.com

2 number of towers

2 number of slides

2 number of roofs

8 number of interactive elements

stairs

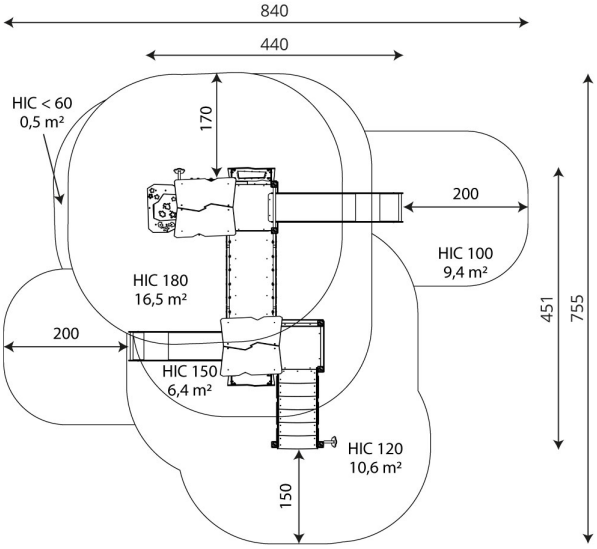

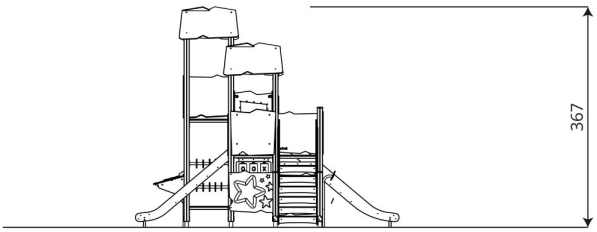

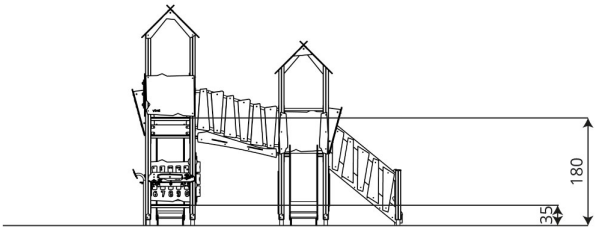

Product technical sheet

WOODEN WD1504

Product data

Length	440 cm
Width	451 cm
Total height	367 cm
Age group	3 - 14 years
Number of users	29 kids
Safety zone	43,4 m2
Free fall height	180 cm
The height of the platforms	35,120, 150, 180 cm
In accordance with norm EN	1176-1:2017
Weight of the heaviest part	34 kg
Dimensions of the largest part	317x9x9 cm
Availability of spare parts	YES
Installation time	9 h
Color options	

Data is subject to change without prior notice.

Additional information

- equipment adapted for the disabled; intended for public playgrounds;
- equipment has a certificate issued by an accredited entity or a declaration of conformity;
- no sharp edges or chinks that would pose a danger of jimming the head, fingers or any other body parts;
- anchoring on flat surface, 80/70/60 cm deep;
- slide should not be installed southwards;
- render is for reference only, the actual appearance of the equipment and its color may vary;

Guarantee

30 30 year guarantee - Structural strength of steel and stainless steel components

15 15 year guarantee - Structural failure of steel and stainless steel, for dynamic equipment

10 10 year guarantee - Structural failure of high density polyethylene and high pressure laminates components

5 5 year guarantee - Corrosion of stainless steel and hot dip galvanized and powder coated components; against bark beetles and rot in case of wooden structural elements

Detailed information in the guarantee card

Vinci Group Sp. z o.o.
Seminaryjna 9 Street
99-400 Łowicz

VAT: 534-250-14-46
PHONE: +48 42 203 24 99 ext. 26
M: +48 793 404 991

biuro@vinci-play.com
info@vinci-play.com
www.vinci-play.com

Product technical sheet

WOODEN WD1504

Surfaces according to EN 1176-1:2017

	Description (mm)	Layer thickness (cm)	Maximum fall heights (cm)
Turf/ top layer of soil (A,B,C)	-	-	≤100
bark (A,C)	Particle size from 20 to 80	30	≤200
		40	≤300
woodchips (A,C)	Particle size from 5 to 30	30	≤200
		40	≤300
sand or gravel (A,C)	Particle size from 0,25 to 8	30	≤200
		40	≤300
synthetic attested (A,B,C)	Tested according to EN 1177		180

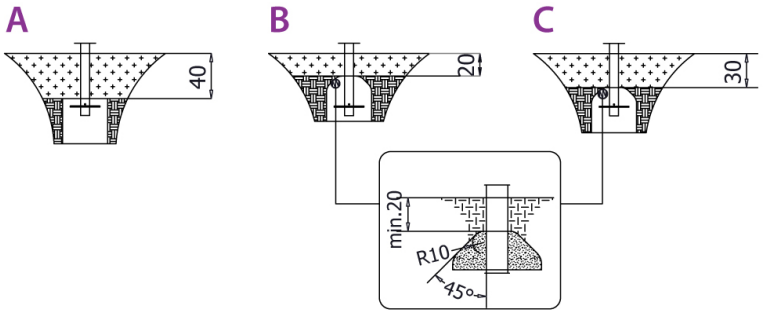

Amount of safe surface corresponding with free fall height:

HIC <60	0,5 m^2
HIC 100	9,4 m^2
HIC 120	10,6 m^2
HIC 150	6,4 m^2
HIC 180	16,5 m^2

Data is subject to change without prior notice.

Vinci Group Sp. z o.o.
Seminaryjna 9 Street
99-400 Łowicz

VAT: 534-250-14-46
PHONE: +48 42 203 24 99 ext. 26
M: +48 793 404 991

biuro@vinci-play.com
info@vinci-play.com
www.vinci-play.com