Product technical sheet

ROBINIA RB1202

1+ | 8 kids | 19,9 m²

Material specification

- Construction made of Robinia - very durable acacia wood with a diameter of ~ 18 cm without sharp edges, resistant to weather conditions,
- Roofs, side panels and seats made of Robinia - very durable acacia wood without sharp edges, resistant to weather conditions,
- Windows made of HPL plate resistant to weather conditions,
- Telescope made of stainless steel and durable HDPE plate, resistant to weather conditions,
- Screws covered with plastic caps and/or stainless steel screws,

Facilitating disability

easy access

integration

Intellectual development

manipulation

sight

Physical development

rest

Vinci Group Sp. z o.o.
Seminaryjna 9 Street
99-400 Łowicz

VAT: 534-250-14-46
PHONE: +48 42 203 24 99 ext. 26
M: +48 793 404 991

biuro@vinci-play.com
info@vinci-play.com
www.vinci-play.com

1 number of roofs

1 number of interactive elements

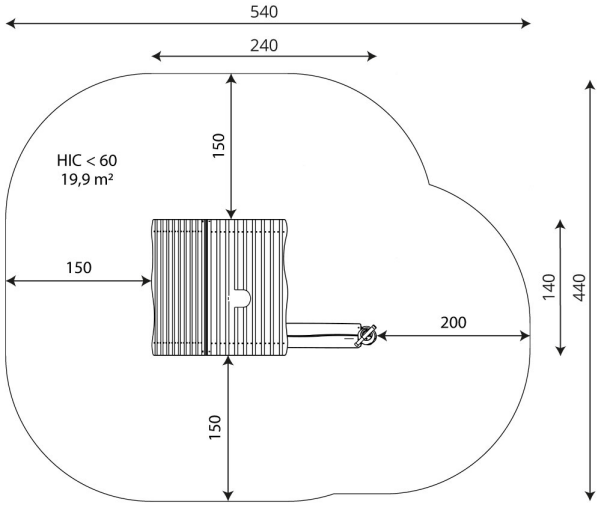

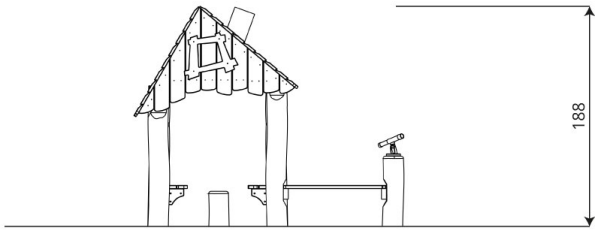

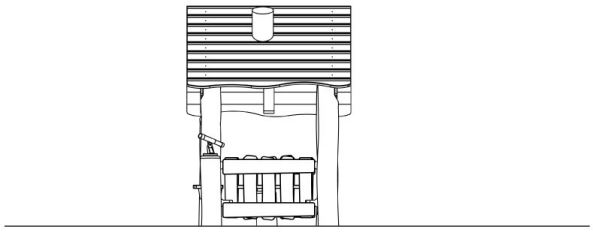

Product technical sheet

ROBINIA RB1202

Product data

Length	240 cm
Width	140 cm
Total height	188 cm
Age group	1+ years
Number of users	8 kids
Safety zone	19,9 m2
Free fall height	<60 cm
In accordance with norm EN	1176-1:2017
Weight of the heaviest part	53 kg
Dimensions of the largest part	230x18x18 cm
Availability of spare parts	YES
Installation time	3 h

Data is subject to change without prior notice.

Additional information

- equipment adapted for the disabled; intended for public playgrounds;
- equipment has a certificate issued by an accredited entity or a declaration of conformity;
- no sharp edges or chinks that would pose a danger of jimming the head, fingers or any other body parts;
- anchoring on flat surface, 80/70/60 cm deep;
- render is for reference only, the actual appearance of the equipment and its color may vary;

Guarantee

30 30 year guarantee - Structural strength of steel and stainless steel components

15 15 year guarantee - Structural failure of steel and stainless steel, for dynamic equipment

10 10 year guarantee - Structural failure of high density polyethylene and high pressure laminates components

5 5 year guarantee - Corrosion of stainless steel and hot dip galvanized and powder coated components; against bark beetles and rot in case of wooden structural elements

Detailed information in the guarantee card

Vinci Group Sp. z o.o.
Seminaryjna 9 Street
99-400 Łowicz

VAT: 534-250-14-46
PHONE: +48 42 203 24 99 ext. 26
M: +48 793 404 991

biuro@vinci-play.com
info@vinci-play.com
www.vinci-play.com

Product technical sheet

ROBINIA RB1202

Surfaces according to EN 1176-1:2017

	Description (mm)	Layer thickness (cm)	Maximum fall heights (cm)
Turf/ top layer of soil (A,B,C)	-	-	≤100
bark (A,C)	Particle size from 20 to 80	30	≤200
		40	≤300
woodchips (A,C)	Particle size from 5 to 30	30	≤200
		40	≤300
sand or gravel (A,C)	Particle size from 0,25 to 8	30	≤200
		40	≤300
synthetic attested (A,B,C)	Tested according to EN 1177		60

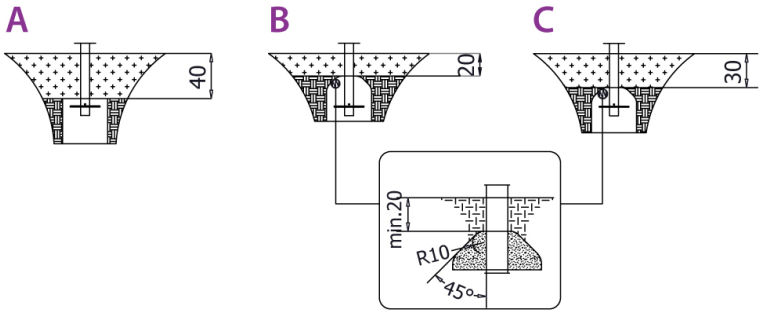

Amount of safe surface corresponding with free fall height:

HIC <60	19,9 m²

Data is subject to change without prior notice.

Vinci Group Sp. z o.o.
Seminaryjna 9 Street
99-400 Łowicz

VAT: 534-250-14-46
PHONE: +48 42 203 24 99 ext. 26
M: +48 793 404 991

biuro@vinci-play.com
info@vinci-play.com
www.vinci-play.com