STREET BARBELL line

Professional Power Outdoors

MB 7.29

BENCH PRESS

in standing position with variable load system

ASSEMBLY MANUAL

StreetBarbell Group Oy, Ohrahuhdantie 4, 00680 Helsinki, Finland

Helsinki, August 2023

General Information

1. Please pay attention to the required soil condition and the correct use of shock-absorbing soil materials in dependence from the free fall height during planning. See DIN EN 16630_2015-06 Tabel 3.

Table 3

	Floor material	More details	Layer depth [a] [mm]	Max. fall height[mm]
01	Concrete / Stone	—	—	≤ 1000
02	Asphalt	—	—	≤ 1000
03	Topsoil	—	—	≤ 1200
04	Lawn	—	—	≤ 1500
05	Bark	Crushed coniferous bark with grain size from 20 mm to 80 mm	200	≤ 2000
			300	≤ 3000
06	Woodchip	Mechanically sawn wood (with no other wood products), without bark and leaves, with grain size from 5 mm to 30 mm	200	≤ 2000
			300	≤ 3000
07	Sand [b,c]	grain size from 0.2 mm to 2 mm	200	≤ 2000
			300	≤ 3000
08	Gravel [b,c]	grain size from 2 mm to 8 mm	200	≤ 2000
			300	≤ 3000
09	Another floor materials or layer depth	Proper HIC research according to EN 1177		proved critical fall height

[a] For bulk materials, add 100 mm to the minimum layer thickness.
[b] Free from silt or clay particles;
Grain size may be identified by use of a sieve test in accordance with EN 933–1
[c] Not suitable for equipment requiring the user to stand on a hard floor

2. In case of health problems during training:

- **the emergency number - 112 should be indicated on the device.**
- **please make sure that users can find a note about the actual location (address) even in the immediate vicinity of the device.**
- **the emergency crew should quickly locate and help the caller.**
- **a notice board should be placed in the immediate vicinity of the device.**

CONTENTS

GENERAL VIEW 4

*OVERALL DIMENSIONS** 4

PURPOSE 5

BASEMENT 5

SEQUENCE OF OPERATIONS 6

BASEMENT EXEMPLAR 7

INSTALLATION DIMENSIONS 8

PARTIAL ASSEMBLY 9

TOOLS REQUIRED 9

SEQUENCE OF OPERATIONS 9

TABLE 1 10

CONNECTING ROD ADJUSTMENT 12

EXPLODED VIEW 13

SPECIFICATION 14

MAINTENANCE 15

VISUAL ROUTINE INSPECTION 15

FUNCTIONAL INSPECTION 15

MAIN ANNUAL INSPECTION 15

REGULAR MAINTENANCE 16

REPAIRS 18

GUARANTEE TERMS AND CONDITIONS 19

GUARANTEE CARD 20

GENERAL VIEW AND SAFETY ZONES

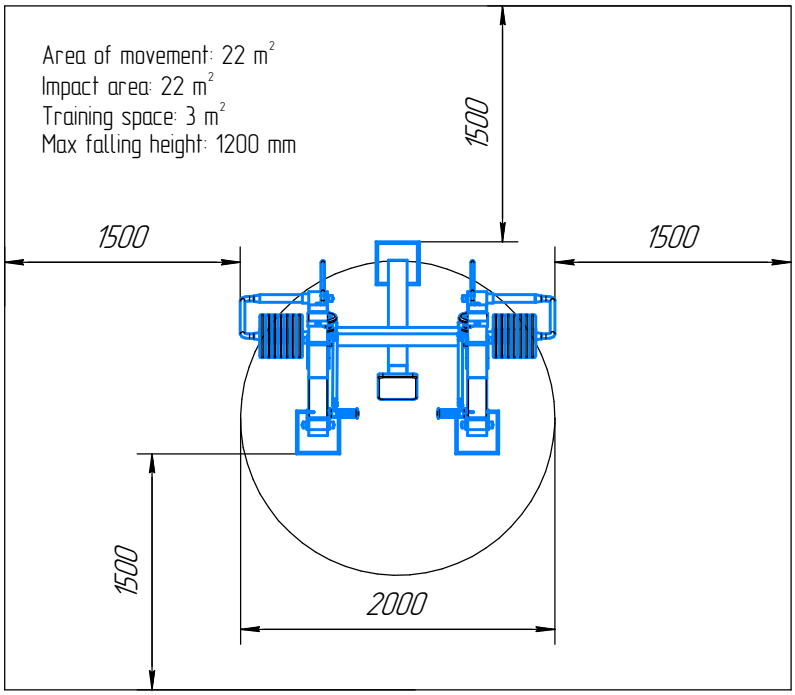

OVERALL DIMENSIONS AND HEIGHT OF FALL*

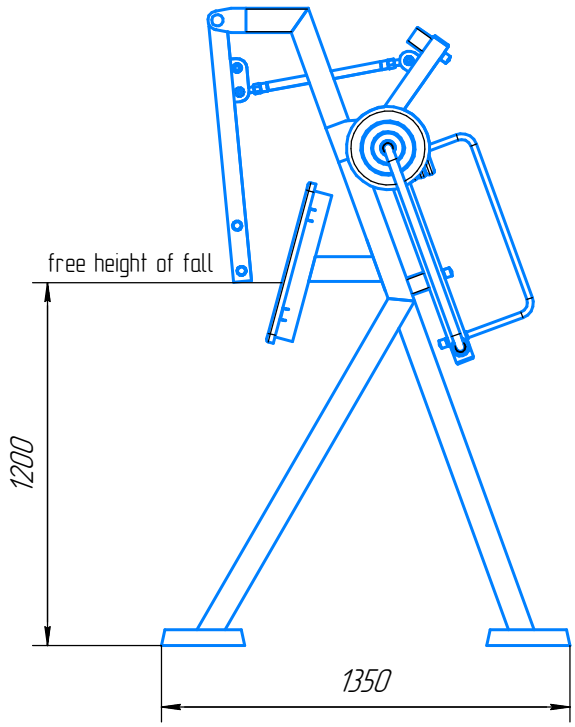

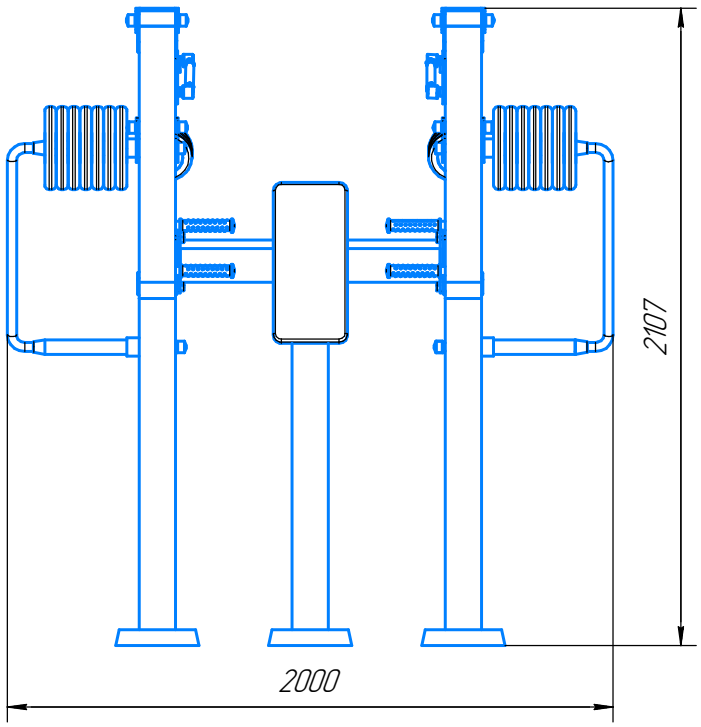

* Herein and hereinafter, the dimensions are in millimeters.

PURPOSE

The exercise machine is designed to train pectoralis major, anterior deltoid and triceps muscles.
* An athlete should move the individual weight plates with both hands

Max arm load: 775 N

ACTIVE MUSCLE GROUP

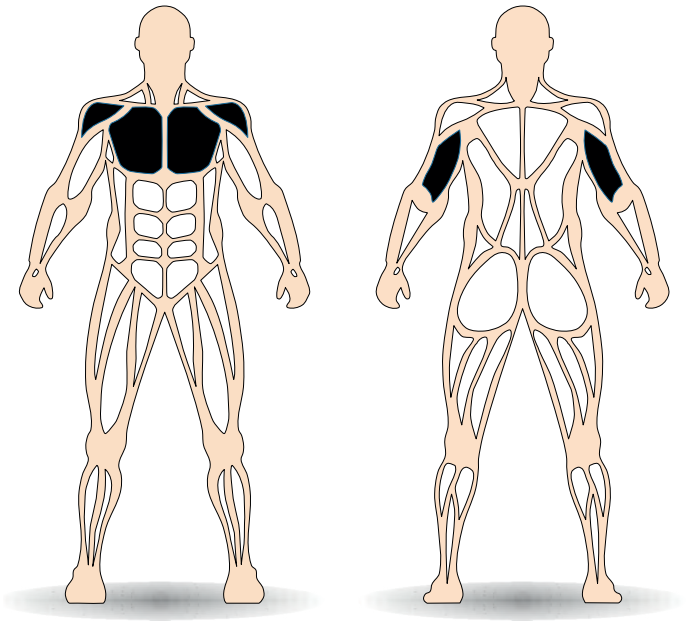

BASEMENT

The foundation work should be done when air temperature is above 0°C (32°F). Anchors should be installed 28 days after cast-in-place concreting.

Nevertheless, if foundation work is planned to be done when air temperature is below 0°C (32°F), workmen should follow cold weather concreting recomendations (special recomendations for your State and region).

The basement of the exersise machine: a cast-in-situ concrete slab with reinforcing network (see detail below). The basement height is 150 mm. The basement is placed under the whole training machine playground. Anchors should be installed in the spot of the equipment placing.

SEQUENCE OF OPERATIONS

1. Excavate a foundation pit and pour leveling course (gravel)
2. Install formwork and reinforcing framework (see detail on page 7)
3. Cast concrete and wait 28 days
4. Earth a foudation and install anchor bolts (12 pcs)
5. Install the exercise machine onto foundation
6. Tighten the nuts
7. Install a rubber case on each stanchion (see detail on current page)
8. After the installation of all exercise machines on a playground, it is advisable to cover the playground with rubber coating.

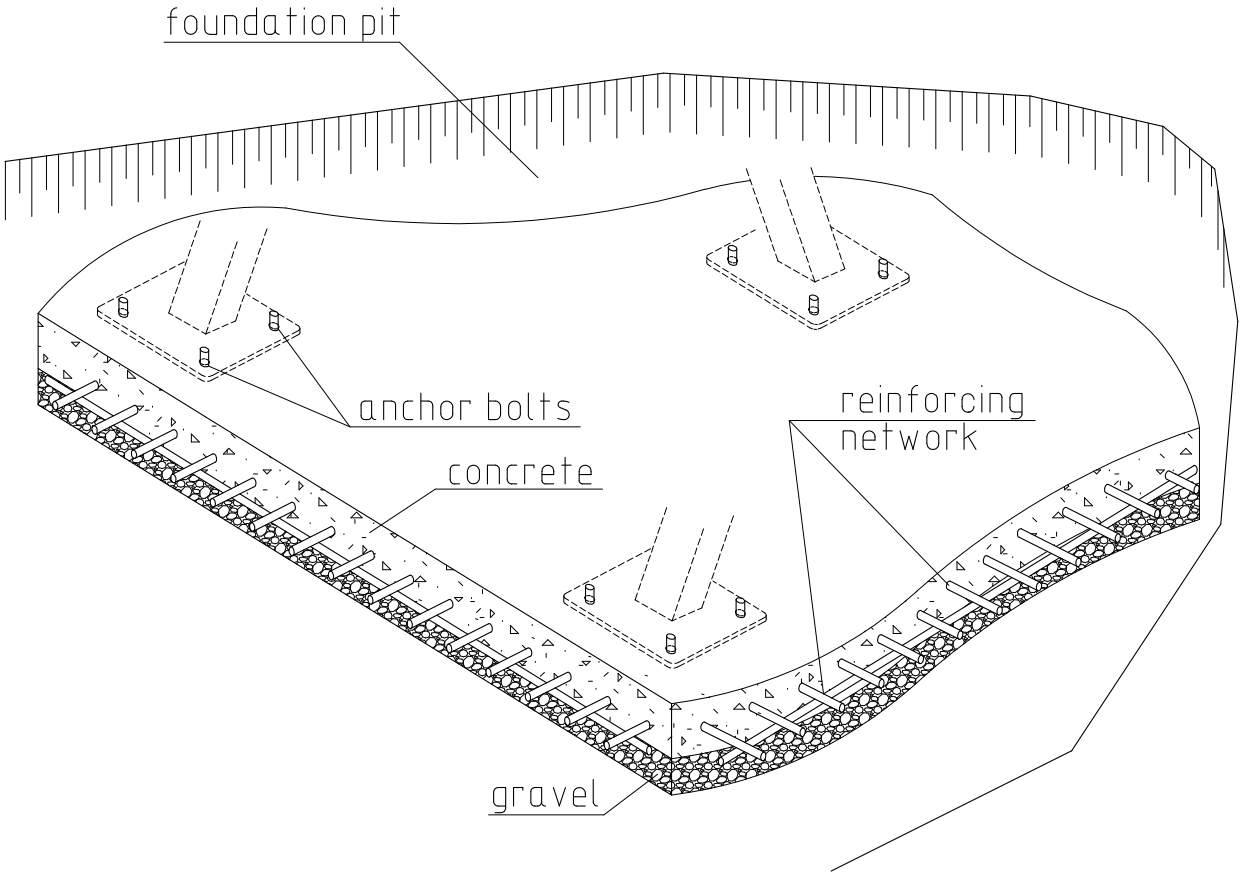

*The exercise machine has been removed for clarity

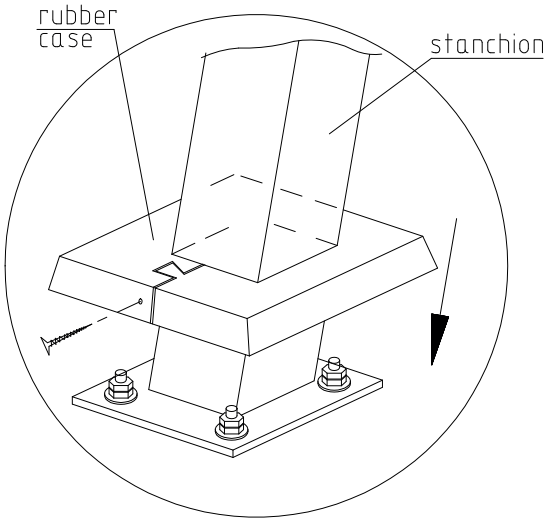

BASEMENT EXEMPLAR

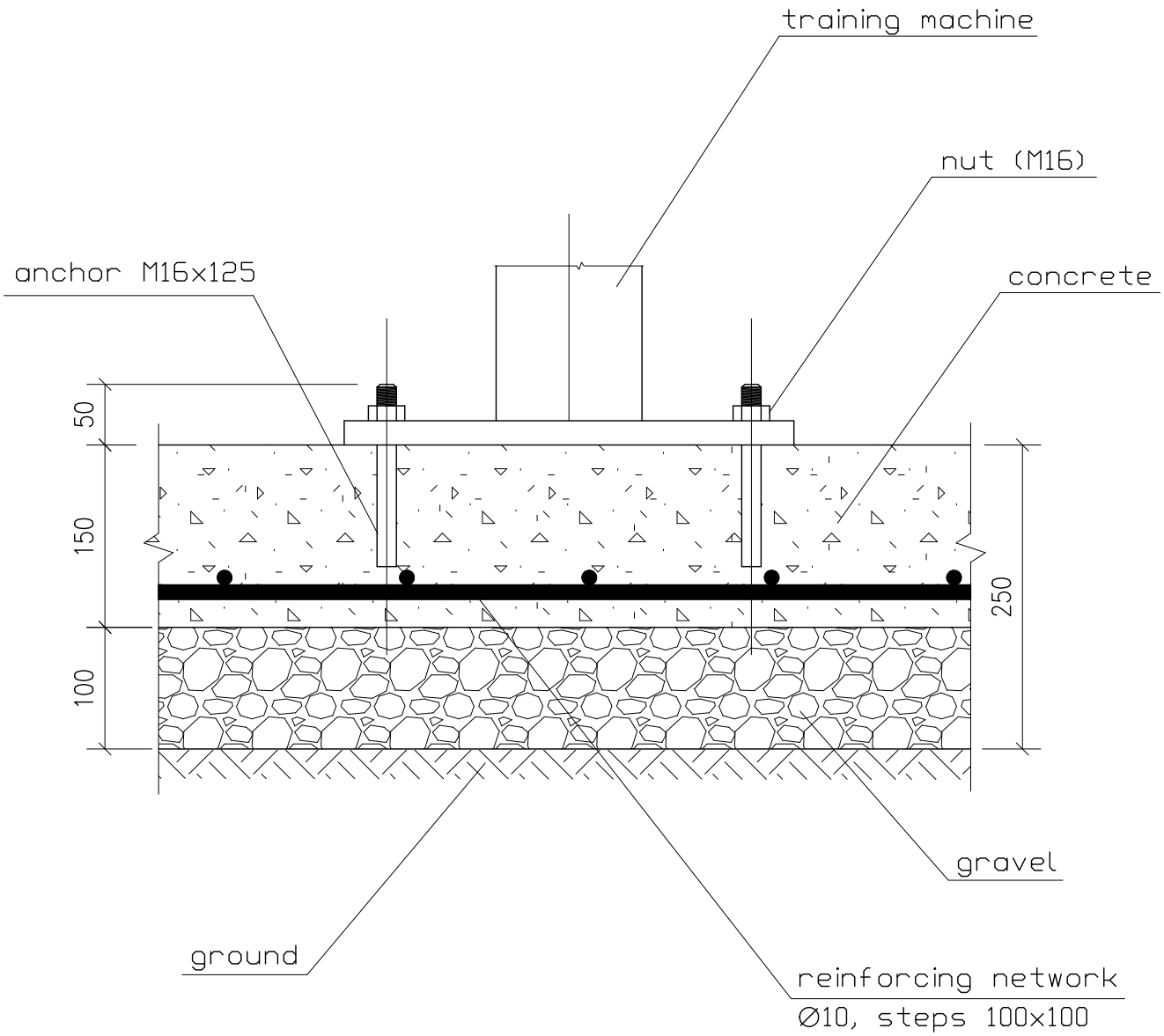

*IMPORTANT!
Foundation works should be done according to the building codes of your State.

INSTALLATION DIMENSIONS

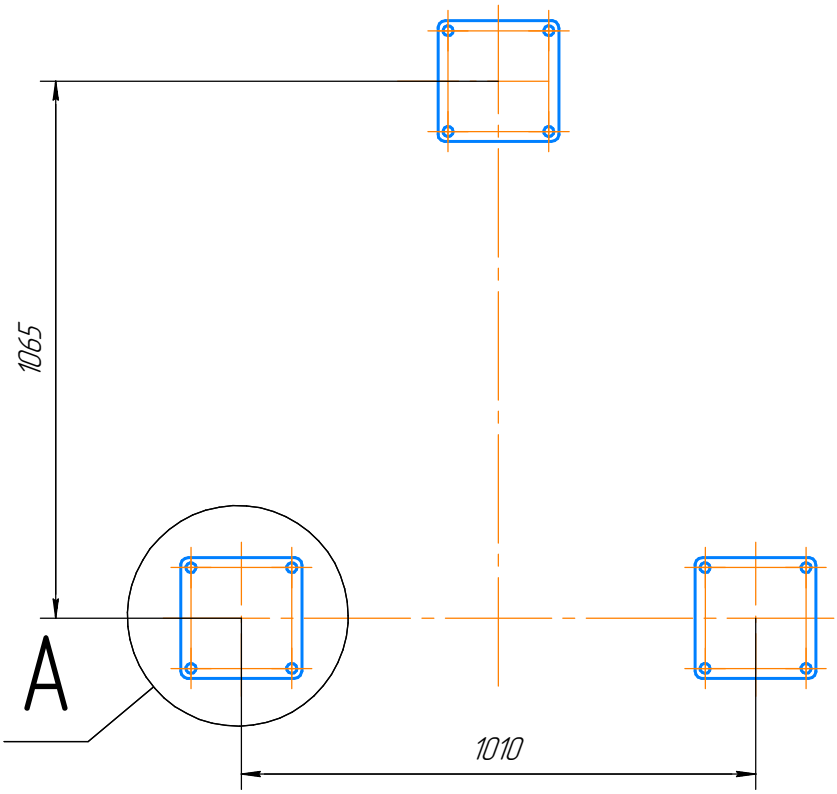

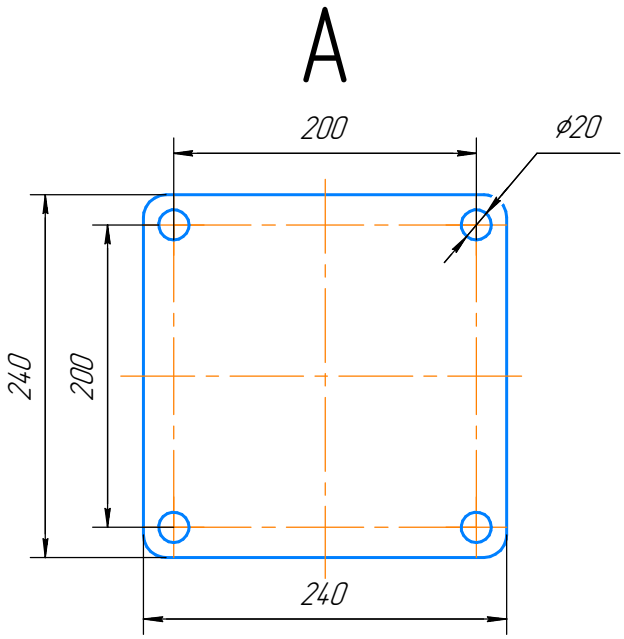

PARTIAL ASSEMBLY

TOOLS REQUIRED

- WRENCHES: 22, 24, 27, 30 (imperial: 7/8’’, 61/64’’, 1 3/32’’, 1 3/16’’)
- ADJUSTABLE WRENCH (for USA and UK)
- ALLEN KEY (HEX KEY): 10
- RUBBER MALLET
- BALL JOINT SEPARATOR: 18.5
- TAPE MEASURE
- PEOPLE: 2

SEQUENCE OF OPERATIONS

The sequencing of assembly and quantity of weights are shown, using exercise machine 7.44 as an example. The rest of Street Barbell machines should be assembled the same way. The table 1 (page 10) contains a quantity of weights for each product of Street Barbell series.

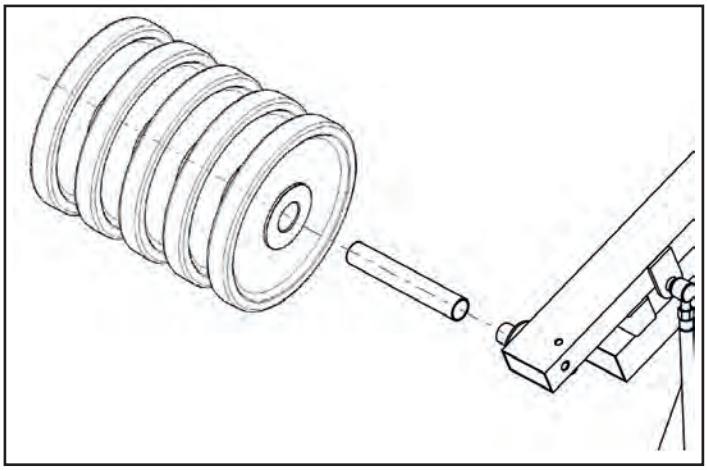

On both sides of the exercise machine: attach the sleeve, put weight plates (5 pcs of 10 kg each) on the sleeve.

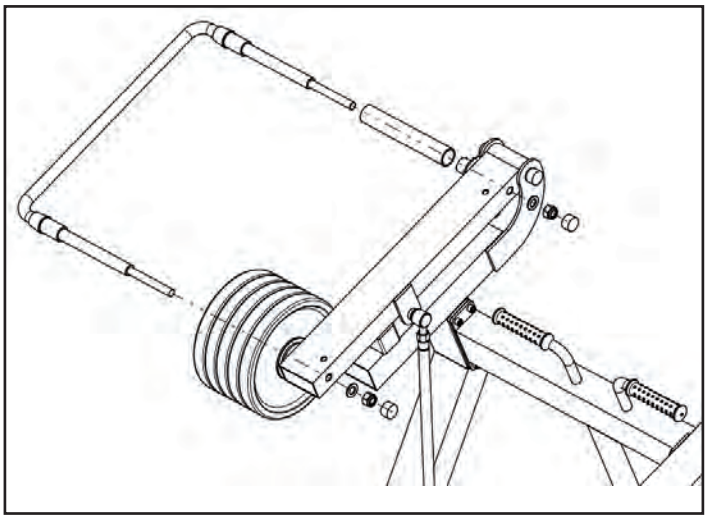

On both sides of the exercise machine: insert the guide rail into the sleeve. Fasten the ends by nuts.

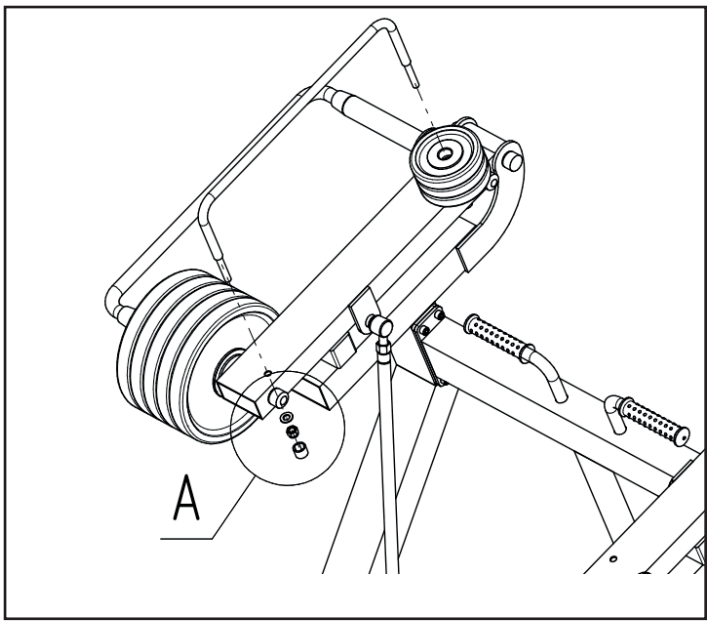

On both sides of the exercise machine: place weight plates (3 pcs of 2,5 kg each), as shown in the figure. Then attach a small guide rail to a lever by nuts. It's done!

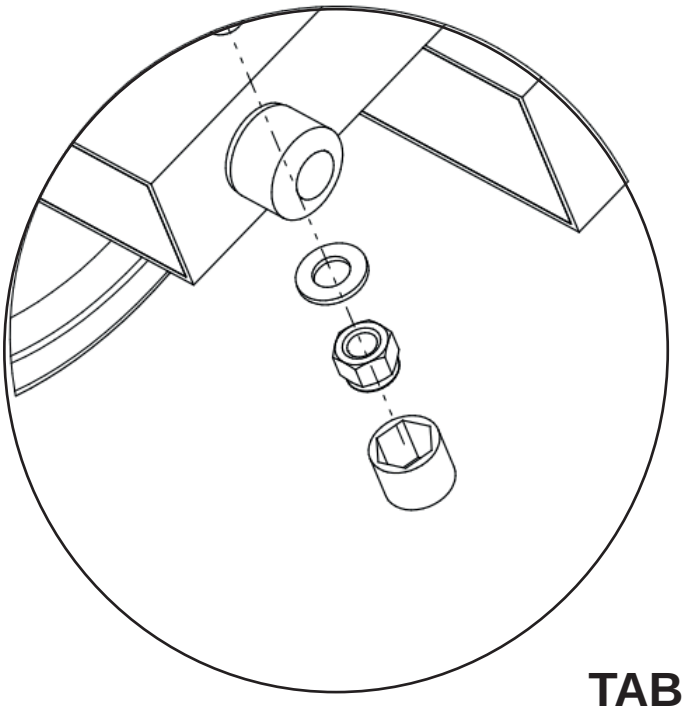

← **Detail A.**

TABLE 1

Street Barbell exercise machines. Set of weights.

Part No	Title	10 kg	2,5 kg	Other weight
MB 7.29	Bench press in standing position with variable load	10	6	
MB 7.30	Chest press in standing position with variable load	14	6	
MB 7.31	Butterfly in standing position with variable load	8	6	
MB 7.32	Butterfly reverse in standing position with variable load	8	6	
MB 7.33	Dumbbell set in standing position with variable load			11kg, 16kg, 18,5kg

Part No	Title	10 kg	2,5 kg	Other weight
MB 7.34	Dumbbell set in standing position with variable load			21kg, 26kg, 31kg.
MB 7.37	Lat pull with variable load	14	6	
MB 7.38	Pull down with variable load	14	6	
MB 7.39	Biceps curl in standing position with variable load	6	6	
MB 7.40	Squat with variable load	14	6	
MB 7.41	Combolift with variable load	14	6	
MB 7.42	Triceps in standing position with variable load	8	6	
MB 7.43	Leg curl in standing position with variable load	10	6	
MB 7.44	Leg extension in standing position with variable load	10	6	
MB 7.45	Gluteus radial in standing position with variable load	14	6	
MB 7.46	Vertical rope pull in standing position with variable load	8	6	
MB 7.47	Street workout bodyweight exercises			Euro classic with handles: 10kg, 15kg, 20kg.
MB 7.48	Canopy			
MB 7.49	Outer thigh in standing position with variable load	14	6	
MB 7.50	Inner thigh in standing position with variable load	14	6	
MB 7.51	Abdominal in standing position with variable load	10	6	
MB 7.52	Converging chest press in standing position with variable load	14	6	
MB 7.53	Diverging lat pull with variable load	14	6	
MB 7.54	Converging bench press in standing position with variable load	10	6	
MB 7.55	Diverging pull down with variable load	14	6	

CONNECTING ROD ADJUSTMENT

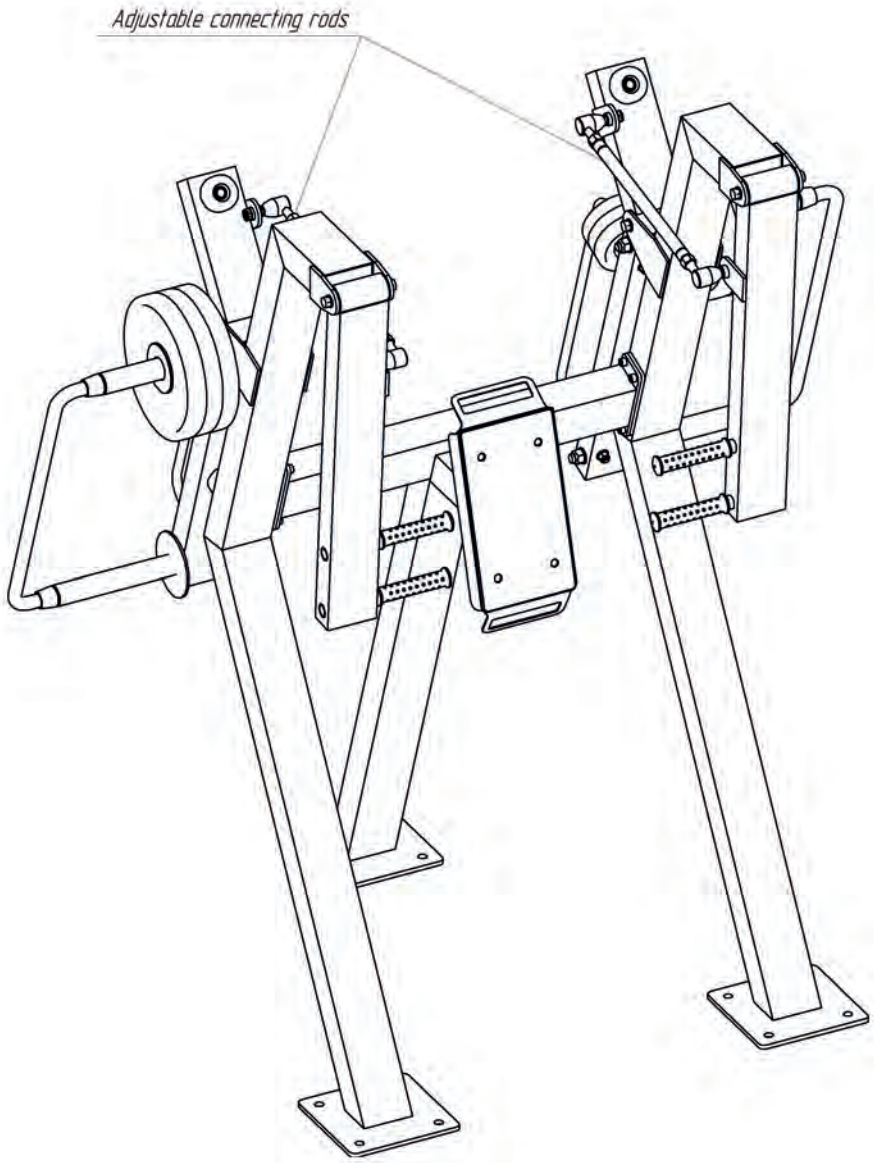

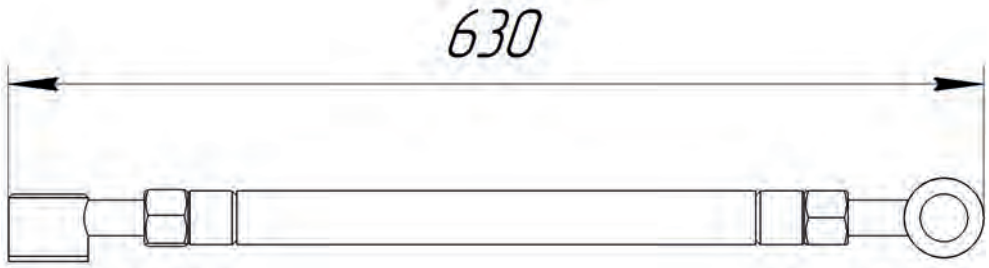

EXPLODED VIEW

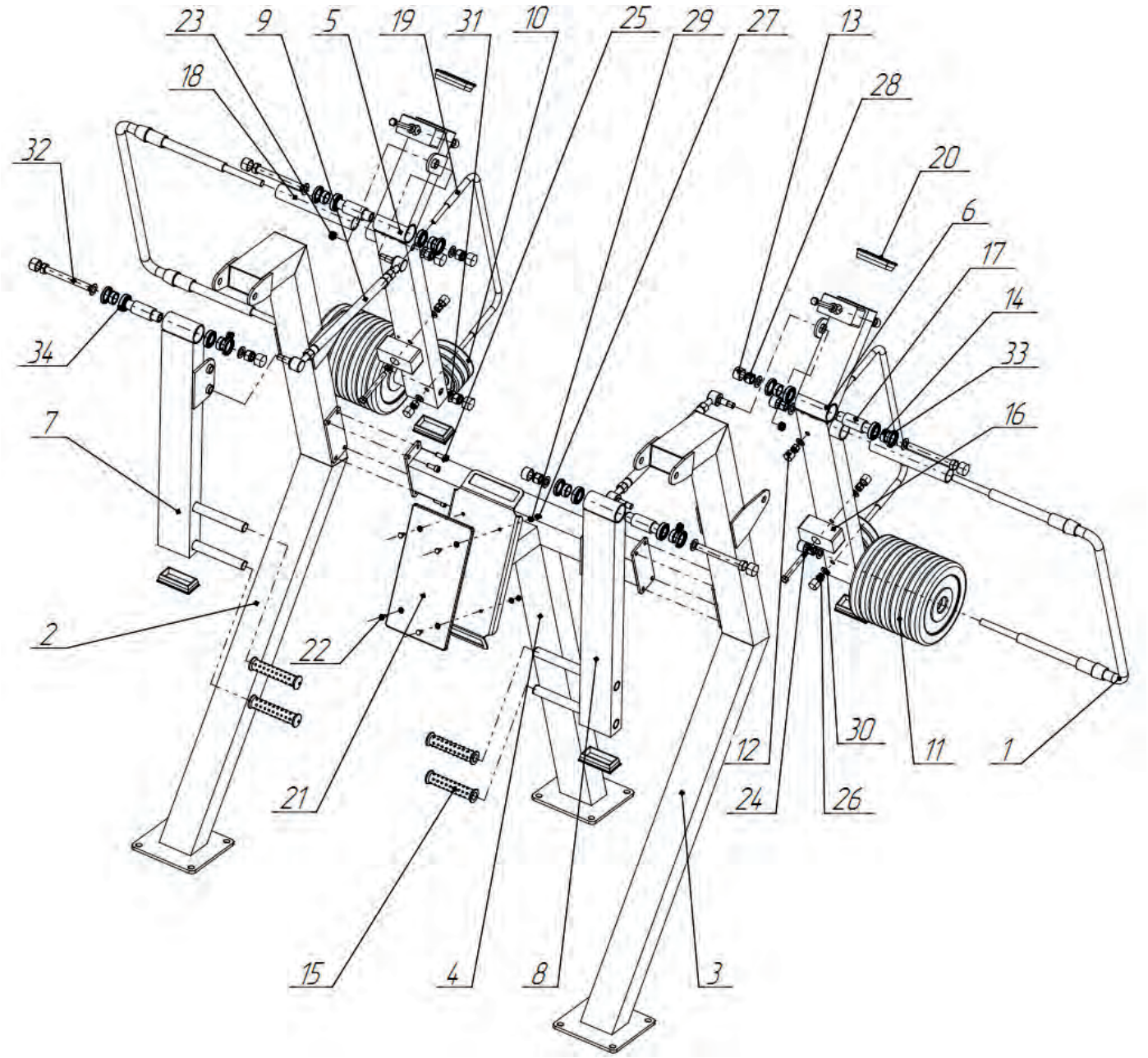

* The equipment design is subject to change without notice.

SPECIFICATION

Format	Zone	Item NO	Part NO	Description	Qty	Note
				Assembly units		
		1	MB 7.00.70	Guide rail	2	
		2	MB 7.30.01.00	Left stanchion	1	
		3	MB 7.30.01.00-01	Right stanchion	1	
		4	MB 7.30.02.00	Stanchion	1	
		5	MB 7.30.03.00	Left lever	1	
		6	MB 7.30.03.00-01	Right lever	1	
		7	MB 7.30.04.00	Left holder	1	
		8	MB 7.30.04.00-01	Right holder	1	
		9	MB 7.30.06.00	Adjustable connecting rod	2	
				Parts		
		10	BL-5	Disk 2,5 kg	6	
		11	BL-10	Disk 10 kg	14	
		12	K-22 (M14)	Cap	8	
		13	K-30 (M20)	Cap	12	
		14	MB 7.00.02	Bushing	8	
		15	MB 7.00.10	Handle	4	
		16	MB 7.00.11	Shock absorber	4	
		17	MB 7.00.21	Shaft	4	
		18	MB 7.00.22	Sleeve	4	
		19	MB 7.00.23	Small guide rail	2	
		20	MB 7.00.55	End cap	6	
		21	MB 7.30.00.16	Backrest	1	
				Standard products		
		22		Cup head bolt DIN 607-M8 x 20-3.6	4	
		23		Nut DIN 979-M16 x 1.5-04	4	
		24		Hexagon head bolt ISO 4014-M14 x 120-10.9	4	
		25		Hexagon socket head cap screw ISO 4742-M12 x 30-10.9	8	
		26		Prevailing torque type hexagon nut ISO 7040 - M14-10	8	
		27		Prevailing torque type hexagon nut ISO 7042 - M8-10	4	
		28		Prevailing torque type hexagon nut ISO 10512 - M20 x	8	
		29		Washer ISO 7089-8-200 HV	4	
		30		Washer ISO 7089-14-200 HV	12	
		31		Washer ISO 7089-20-200 HV	12	
		32	GOST 7805-70	Bolt M20-6gx170	4	
		33	GOST 8752-79	Cuff 1.1-38 x55-1 /4	8	
		34	GOST 8338-75	Bearing 106	8	

MAINTENANCE

Equipment condition monitoring includes:

1. equipment inspection prior to commissioning;
2. visual routine inspection;
3. functional inspection;
4. main annual inspection.

Arrangements for the first time after installation of the product.

Please check the stability, the condition of the screw and bolt connections and cover caps within 14 days after commisioning.

VISUAL ROUTINE INSPECTION

The search for visual dangerous defect. It could be a result of vandalism, misuse or climate.

The customer makes a schedule of visual routine inspection according to the rules of use. Included operations:

1. appearance and cleanliness testing for equipment (and a playground);
2. estimating a clearance between equipment parts and playground surface;
3. checking for protruding foundation parts;
4. checking for obvious exercise machine malfunctions (or defects);
5. checking for missing equipment parts;
6. checking for equipment structural integrity.

FUNCTIONAL INSPECTION

Included operations: the detailed estimation of equipment operability, wear assessment, strength evaluation and sustainability assessment. An inspection is carried out on a quarterly basis.

MAIN ANNUAL INSPECTION

Included operations: the estimation of equipment operability (the exercise mashine should correspond to safety requirements); the equipment service; the search for metal corrosion; the estimation of repairment impact on the equipment security.

The particular attention should be paid to the invisible and inaccessible equipment parts.

If a problem was found in operation, it should be troubleshooted immediately. When troubleshooting is impossible, the usage of equipment should be prohibited (or equipment should be removed from the playground). The usage of unsafe exercise machine is prohibited.

WARNING! Any structural redesign of equipment (or parts) without prior written approval from the manufacturer of the equipment is banned.

The decision about the necessity of carrying out a regular maintenance (and included operations) is based on the results of the visual routine inspection (of the functional inspection; of the main annual inpection).

REGULAR MAINTENANCE

Regular maintenance involves activities to support the safety and quality of the equipment and coating of the playground:

1. Inspection of element attachment points of the exercise machine. Nuts tightening, if necessary.

An existence of extra clearances between training machine elements (between a bolt and training machine element) results in necessity of tightening of element nuts.

Depending on the joint type (imbus or bolt+nut), tightening should be done by proper wrench or allen key, until disappearing of the clearance.

The play between bolted joint elements is unacceptable.

2. Searching for backlash in movable elements of the exercise machine. The backlash should be eliminated.

The backlash elimination procedure: take off the end cap, tighten the nut with proper wrench. The element should retain the ability to return to the initial position without extra help. If the backlash still remains, then replace the bearing.

3. The replacement of broken bearings.

In order to replace a broken bearing you need to take off the end cap. Then loosen the nut by proper wrench and take it off. Remove the bearing by a bearing puller tool. The assembly of the joint should be done in reverse order.

4. Filling built-in lubricators (if available).

Some exercise machines contain a built-in lubricator, it should be filled with the lubricant (Liqui Moly Mehrzweckfett, Mobil Mobilux EP, Motul Grease 100 and the like) by a grease gun.

The built-in lubricator has a special nut (metric wrench size: 9 mm; imperial standards: 23/64’’). If the proper wrench is unavailable in your country (e.g.,USA, UK) use ajustable wrench for replacing the lubricator.

5. Loss checking of tightening torque of anchor nuts.

The joint of exercise machine stanchion and the foundation should be firm and reliable. The clearance between the foundation and a stanchion plate is unacceptable. Besides, the clearance should not appear during a workout.

Tighten an anchor nut and clearance will disappear. The training machine should be reinstalled in case of clearance existence after tightening anchor nuts.

6. Installation of missing stanchion rubber cases (page 6).

There is a rubber case placed on each stanchion of the exercise machine. The case covers protruding anchor bolts of the equipment.

The edges of the rubber case are joined by a dovetail joint. To prevent the theft of the product it is advisable to lock the dovetail joint by a screw.

7. Installation of missing or damaged PVC handles.

Damaged PVC handles (cracks, missing parts) should be replaced. For the replacement, cut off handle residue. Erase a metal surface by a sandpaper, then degrease the surface. Glue a new handle by polyurethane adhesive (e.g., Loctite PL Premium, Gorilla Glue).

8. Installation of missing or damaged bakelite plywood coverings.

Bakelite plywood coverings with defects (cracks, spalls, uneven edges) should be replaced because of possible injuries of an athlete.

Unscrew the nuts placed on a reverse side of the metal plate which carries the covering in order to replace a covering. Use wrench 13 (33/64’’). Then pull out furniture bolts. The attachment of the covering should be done in reverse order.

9. Installation of missing or damaged plastic caps placed on bolts and nuts.

Protruding bolts and nuts should be covered with caps, excluding hex bolts.

10. Inspection of rubber shock absorbers (existence and degree of wear).

It is necessary to install a new shock absorber in the place of the stolen one. Damaged rubber shock absorbers (cracks, missing parts) should be replaced. Unscrew the nut in order to replace a shock absorber.

11. Inspection of bearing end caps (existence and degree of wear).

An end cap protects a bearing against moisture and dust, the bearing is out of reach of children and curious people. Pick up the end cap by the slotted screwdriver in order to replace the end cap.

12. New information plates gluing.

The equipment information plates display correct exercising and accident prevention.

Gluing should be done when air temperature is above 10°C (50°F). Take off damaged information plate residue and dust. Degrease the surface of the equipment and glue new information plate.

REPAIRS

Repairs include:

- fasteners replacement;
- welding;
- equipment parts replacement (stanchions, discs, guide rails);
- corrosion removal and equipment recoloring.

Production address:
StreetBarbell Group Oy,
Ohrahuhdantie 4, 00680
Helsinki, Finland

GUARANTEE TERMS AND CONDITIONS

This guarantee does not affect your statutory rights under applicable national laws relating to the sale of consumer products.

This product corresponds to the standard and it is suitable for use. The purpose of the product is training of human body muscles.
The manufacturer guarantees this equipment to the original purchaser to be free from defects in materials and workmanship.
The guarantee period is one year, commencing from the original date of purchase, provided that the purchaser follows the maintenance rules (see Maintenance chapter).
When the purchase date is not confirmed, guarantee period commences from the equipment production date.
If the purchaser has a document proving the delivery date, the guarantee period commences from the delivery date.
Guarantee period does not extend in case of guarantee repair of the equipment.
The lifetime of the equipment is 5 years since purchase date.
When the lifetime is over all parts and joints of the equipment should be carefully examined by specialists. The specialists decide then if further use is possible.
If such examination is impossible, then the equipment should be removed off the playground.

This guarantee does not cover if:

- the damage caused by not following the maintenance rules;
- the damage caused by a misuse;
- there are impact marks on the product surface;
- there is repair (attempted repair) made to the product by a third party;
- there is force majeure.

GUARANTEE CARD

Serial number:_____

GUARANTEE CARD #1
guarantee repair of exercise machine

Vendor:_____
_____

Purchase date:_____

L.S. _____
seller's signature

Purchaser:_____
Address of the purchaser:_____

Purchaser's signature:_____

Defects eliminated_____
_____
_____
_____
_____
_____

Vendor: _____
Purchaser:_____

Tear-off coupon of guarantee card #1
guarantee repair of exercise machine

Date of repair:_____
Vendor: _____